Mayor and Council

Final Draft

Zoning Ordinance Revision

September 2, 2008

CITY OF ROCKVILLE, MARYLAND
CHAPTER 25, ZONING ORDINANCE

TABLE OF CONTENTS

Article 1 – General Information

25.01.01 – Title and Effective Date
25.01.02 – Purpose
25.01.03 – Authority
25.01.04 – Relation to Master Plan
25.01.05 – Applicability
25.01.06 – Compliance
25.01.07 – Interpretation
25.01.08 – Severability
25.01.09 – Vested Zoning Rights

Article 2 – Zoning Map

25.02.01 – Zoning Map
25.02.02 – Boundaries of Zones
25.02.03 – Properties Divided Between the City and County
25.02.04 – Zoning of Annexed Land

Article 3 – Definitions; Terms of Measurements and Calculations

25.03.01 – General Rules of Interpretation
25.03.02 – Words and Terms Defined
25.03.03 – Terms of Measurement and Calculation
25.03.04 – Chart of Symbols

Article 4 – Approving Authorities

25.04.01 – Mayor and Council
25.04.02 – Planning Commission
25.04.03 – Board of Appeals
25.04.04 - Historic District Commission
25.04.05 – Sign Review Board
25.04.06 – Chief of Planning
25.04.07 – Chief of Inspection Services
25.04.08 – Additional Approvals

Article 5 – Application and Notification Generally

25.05.01 – Exceptions

25.05.02 – Applications
25.05.03 – Public Notifications
25.05.04 – Modification of Pending Application
25.05.05 – Access to Application Files
25.05.06 – Notification of Decision
25.05.07 – Amendments to Approved Development
25.05.08 – Extension of Implementation Period
25.05.09 – Appeals
25.05.10 – Certain Defects Not Jurisdictional

Article 6 – Procedures for Map and Text Amendments, Variances, Special Exceptions and Administrative Actions

25.06.01 – Zoning Map Amendments
25.06.02 – Text Amendments
25.06.03 – Variances
25.06.04 – Administrative Interpretation
25.06.05 – Administrative Adjustments in Single Unit Dwelling Residential Zones

Article 7 – Procedures for Site and Project Plan, Special Exceptions, and Other Permits

25.07.01 – Site Plan, Project Plan, and Special Exception Approval Required
25.07.02 – Procedure for Site Plans, Project Plans, and Special Exceptions
25.07.03 – Level One (1) Site Plan Review
25.07.04 – Level Two (2) Site Plan Review
25.07.05 – Level Three (3) Site Plan Review
25.07.06 – Site Plan Implementation Period
25.07.07 – Project Plan Review
25.07.08 -- Review of Special Applications for Special Exceptions
25.07.09 – Temporary Use Permit
25.07.10 – Sign Permit
25.07.11 – Occupancy Permit
25.07.12 – Temporary Occupancy Permit
25.07.13 – Certificate of Approval in Historic Districts
25.07.14 – Additional Permits and Approvals

Article 8 – Transitional Provisions, Nonconformities, Nonconforming Alteration Approval

25.08.01 – Purpose of this Article
25.08.02 – Transitional Provisions
25.08.03 – Qualifying Substandard Lots
25.08.04 – Nonconforming Uses
25.08.05 – Development Standards Nonconformities
25.08.06 – Existing Structure or Development
25.08.07 – Nonconforming Alteration Approval

Article 9 – Accessory Uses; Accessory Buildings and Structures; Encroachments; Temporary Uses; Home-Based Business Enterprises; Wireless Communication Facilities

25.09.01 – General Requirements
25.09.02 – Accessory Uses
25.09.03 – Accessory Buildings and Structures
25.09.04 – Temporary Uses
25.09.05 – Setback Encroachments
25.09.06 – Height Encroachments
25.09.07 – Home-Based Business Enterprise
25.09.08 – Wireless Communication Facility

Article 10 - Single Dwelling Unit Residential Zones

25.10.01 – Purpose
25.10.02 – Zones Established
25.10.03 – Land Use Tables
25.10.04 – Prohibition on the Creation of New Pipestem Lots
25.10.05 – Development Standards
25.10.06 – Additional Neighborhood Districts
25.10.07 – Accessory Uses and Structures
25.10.08 – Moderately Priced Dwelling Units
25.10.09 – Special Regulations for Floor Area Ratios and Building Height in the R-60, R-75, and R-90 Zones
25.10.10 – Nonconformities
25.10.11 – Parking and Loading Requirements
25.10.12 – Landscaping and Buffer Requirements
25.10.13 – Signs

Article 11 – Residential Medium Density Zones

25.11.01 – Purpose
25.11.02 – Zones Established
25.11.03 – Land Use Tables
25.11.04 – Development Standards
25.11.05 – Special Regulations for Development in the RMD-10 Zone
25.11.06 – Special Provisions for Townhouse Development in the RMD Zones
25.11.07 – Process for Approval
25.11.08 – Accessory Uses and Structures
25.11.09 – Nonconformities
25.11.10 – Parking and Loading Requirements
25.11.11 – Landscaping and Buffer Requirements
25.11.12 – Signs

Article 12 – Industrial Zones

25.12.01 – Purpose
25.12.02 – Zones Established
25.12.03 – Land Use Tables
25.12.04 – Development Standards
25.12.05 – Accessory Uses and Structures
25.12.06 – Nonconformities
25.12.07 – Parking and Loading Requirements
25.12.08 – Landscaping and Buffer Requirements
25.12.09 – Signs

Article 13 – Mixed-Use Zones

25.13.01 – Purpose
25.13.02 – Zones Established
25.13.03 – Land Use Tables
25.13.04 – Special Regulations for Conditional Uses
25.13.05 – Development Standards
25.13.06 – Additional Design Guidelines
25.13.07 – Special Design Regulations for Individual Mixed-Use Zones
25.13.08 – Accessories
25.13.09 – Nonconformities
25.13.10 – Parking and Loading Requirements
25.13.11 – Landscaping and Buffer Requirements
25.13.12 – Signs

Article 14 – Special Zones

25.14.01 – Historic District Zones
25.14.02 – Neighborhood Conservation Districts
25.14.03 – Lincoln Park Neighborhood Conservation District
25.14.04 – Reserved
25.04.05 – Reserved
25.14.06 – Park Zone
25.14.07 – Planned Development Zones
25.14.08 – PD-RS (Rockshire)
25.14.09 – PD-FM (Fallsmead)
25.14.10 – PD-FM2 (Fallsmead 2)
25.14.11 – PD-FB (Fallsbend)
25.14.12 – PD-CH (Carter Hill)
25.14.13 – PD-BA (Barnside Acres)
25.14.14 – PD-FL (Flint Ledge Estates)
25.14.15 – PD-RH (Rose Hill)

25.14.16 – PD-RHF (Rose Hill Falls)
25.14.17 – PD-BU (Buckingham Property)
25.14.18 – PD-CL (Chestnut Lodge)
25.14.19 – PD-NM (New Mark Commons)
25.14.20 – PD-DF (Dawson Farm)
25.14.21 – PD-MH (Meadow Hall)
25.14.22 – PD-RF (Redgate Farm)
25.14.23 – PD-LG (Legacy)
25.14.24 – PD-KF (King Farm)
25.14.25 – PD-FG (Fallsgrove)
25.14.26 – PD-UR (Upper Rock)
25.14.27 – PD-TO (Tower Oaks)
25.14.28 – PD-KSI (KSI Apartments)
25.14.29 – PD-RCI (Rockville Center, Inc.)
25.14.30 – PD-TC (Twinbrook Commons)
25.14.31 – PD-TS (Town Square)
25.14.32 – PD-SG (Shady Grove)
25.14.33 – PD-MC (Metro Center)
25.14.34 – PD-CB (Champion Billiards)

Article 15 – Special Exceptions

25.15.01 – Special Exceptions
25.15.02 – Additional Requirements for Certain Special Exceptions

Article 16 – Parking and Loading

25.16.01 – Purpose
25.16.02 – General Requirements
25.16.03 – Number of Spaces Required
25.16.04 – Location of Parking and Loading Facilities
25.16.05 – Location in Relation to Use Served
25.16.06 – Parking Design Standards
25.16.07 – Parking Structures Design
25.16.08 – Automated Parking Structures
25.16.09 – Bicycle Parking

Article 17 – Public Use Space, Landscaping and Screening, Utility Placement and Screening, Lighting, Sidewalks, and Shadows

25.17.01 – Public Use Space
25.17.02 – Landscaping and Screening
25.17.03 – Underground Installation of Utility Lines Required; Screening or Underground Installation of Transformers; and Equipment Lockers Required

25.17.04 – Lighting
25.17.05 – Sidewalks
25.17.06 – Shadows, General Regulations
25.17.07 – Environmental Guidelines

Article 18 – Signs

25.18.01 – Legislative Findings; Purposes
25.18.02 – Severability
25.18.03 – Special Application Requirements for the Sign Review Board
25.18.04 – Only Permitted Signs Lawful; Signs Specifically Prohibited
25.18.05 – Exemptions
25.18.06 – Construction, Design, Illumination, and Maintenance of Signs
25.18.07 – Measurement of Sign Area and Height
25.18.08 – Sign Permits; Appeals
25.18.09 – Nonconforming Signs
25.18.10 – Removal of Signs
25.18.11 – Signs Permitted for Residential Uses in All Zones
25.18.12 – Signs Permitted for Nonresidential Uses in Residential Zone
25.18.13 – Signs Permitted in MXNC, MXC, and Industrial Zones
25.18.14 – Signs Permitted in Other Mixed-Use Zones
25.18.15 – Election Signs
25.18.16 – Signs on Public Property and the Public Right-of-Way
25.18.17 – Noncommercial Signs in Lieu of Commercial Signs

Article 19 – Enforcement

25.19.01 – Responsible Persons
25.19.02 – Enforcement Authority
25.19.03 – Violations
25.19.04 – Notice of Violation
25.19.05 – Municipal Infraction Citation
25.19.06 – Stop Work Order
25.19.07 – Suspension and Revocation of Zoning Approvals
25.19.08 – Withholding Other Zoning Approvals
25.19.09 – Additional Remedies
25.19.10 – Remedies Cumulative, Not Alternative

Article 20 – Adequate Public Facilities

25.20.01 – Adequate Public Facilities Standards
25.20.02 – Applicability
25.20.03 – Adequate Public Facilities Determination: Validity Period; Extension; Redetermination

25.20.04 – Applicability to Previously Approved Special Development

Article 21 – Plats and Subdivision Regulations

25.21.01 – Plats
25.21.02 – Final Record Plats
25.21.03 – Recordation of an Existing Single Unit Detached Dwelling Residential Lot (Property)
25.21.04 – Subdivision Approval Required
25.21.05 – Applications
25.21.06 – Adequate Public Facilities
25.21.07 – Waivers; Modification
25.21.08 – Submission Requirements for Preliminary Plans
25.21.09 – Preliminary Plan Approval Procedure
25.21.10 – Plats and Data for Final Approval
25.21.11 – Final Plat Approval Procedures – Generally
25.21.12 – Resubdivision and Minor Subdivisions
25.21.13 – Ownership Plats
25.21.14 – Cluster Development
25.21.15 – Performance Guarantees
25.21.16 – Streets and Highways
25.21.17 – Mid-Block Access
25.21.18 – Easements and Rights-of-Way
25.21.19 – Public Sites and Open Spaces
25.21.20 – Floodplain Regulations
25.21.21 – Tree Planting
25.21.22 – Lots
25.21.23 – Sediment Control and Stormwater Management
25.21.24 – Erosion Area Regulations
25.21.25 – Monuments

This Page Intentionally Blank

Article 1 – General Information

25.01.01 – Title and Effective Date

a. This Chapter is known as the Zoning Chapter (Chapter 25) of the Rockville City Code. It may also be referred to as the Zoning Ordinance for the City of Rockville.

b. The effective date of this Chapter is _____.

25.01.02 – Purpose

The purposes of this Chapter are to:

1. Provide for appropriately scaled, designed, and sited buildings and other structures that are compatible with the natural and built environment;

2. Promote environmentally sustainable developments and otherwise provide for the conservation of natural resources and the environment;

3. Promote the City as an inclusive community by facilitating diversity in housing, building design, and land use;

4. Promote alternative modes of transportation by providing convenient, safe, and connected accessibility to public transportation, pedestrian and bicycle systems, inviting streetscapes, and a mixture of uses;

5. Ensure that development occurs in an orderly fashion consistent with the Master Plan (the "Plan") and the availability of adequate infrastructure capacity and other public facilities;

6. Ensure the most appropriate use of land throughout the City;

7. Protect and enhance the aesthetic and visual character of the City and its residential neighborhoods;

8. Preserve sites, structures, and districts of historical archeological, or architectural significance and their appurtances and environmental settings~~Protect and enhance the City's historic sites and resources~~;

9. Secure the public safety;

10. Provide adequate light and air;

11. Foster innovative, creative, sustainable, and flexible building and site design;

12. Provide attractive, high quality development and design that enhances the community's quality of life; and

13. Otherwise protect and promote the health, safety, comfort, convenience, welfare, and happiness of the Rockville community through the comprehensive regulation of the use and development of land and structures.

25.01.03 – Authority

The provisions of this Chapter are adopted in accordance with the zoning and planning authority enumerated in the City Charter, Article 66B of the Annotated Code of Maryland, as amended, and other applicable State enabling authority.

25.01.04 – Relation to Master Plan

The provisions of this Chapter are adopted in accordance with the Master Plan, and as the Plan may be amended from time to time.

25.01.05 – Applicability

All land within the corporate boundaries of the City of Rockville is subject to the provisions of this Chapter, except as otherwise provided by law.

25.01.06 – Compliance

A person cannot use or develop any land or structure within the City without complying with all applicable provisions of this Chapter.

25.01.07 – Interpretation

a. *Minimum Requirements* - In interpreting and applying this Chapter, the requirements contained within are declared to be the minimum requirements for the protection of the public health, safety, or welfare.

b. *Conflict of Provisions*

1. This Chapter shall not be deemed to interfere with, abrogate or annul, or otherwise affect in any manner whatsoever any ordinance, rule, regulation or permit, or any easement, covenant, or other agreement between parties.

2. Notwithstanding the above, where this Chapter imposes a greater restriction upon the use or development of a building or a site than are imposed or required by other ordinances, rules, regulations, or permits or by easements, covenants, or agreement between parties, the provisions of this Chapter will prevail.

25.01.08 – Severability

a. All provisions of this Chapter are severable.

b. All provisions of any ordinance enacted in the future that amend or add any provision to this Chapter are severable unless such ordinance specifically provides that its provisions are not severable.

c. The finding by a court that some provision of this Chapter or any subsequent amendment is unconstitutional and void does not affect the validity of the remaining portions of this Chapter unless the court finds that the remaining valid provisions alone are incomplete and incapable of being executed in accordance with the legislative intent of the City.

d. Additional severability provisions are contained in Article 18, "Signs".

25.01.09 – Vested Zoning Rights

a. *Vested Right*

1. A vested zoning right allows a property owner to use property in accordance with granted permits and approvals notwithstanding any subsequent amendment to the Zoning Ordinance or the Zoning Map.

2. A property owner's right to a particular use of the property pursuant to the provisions of this Chapter vests upon the occurrence of all of the following:

(a) The approval of a valid occupancy permit and other required Federal, state and local permits and approvals;

(b) Visible ~~construction~~ activity pursuant to all permits and approvals so that the neighborhood may be advised that the land is being devoted to that use; and

(c) The validity period of all permits and approvals has not expired.

3. A property owner's right to a particular construction/development on the property pursuant to the provisions of this Chapter vests upon the occurrence of all of the following:

(a) The issuance of a valid building permit; and

(b) Actual, physical commencement of significant and visible construction pursuant to the building permit, and

(c) The commencement of construction must be undertaken in good faith with the intention to continue with the construction and to carry it through to completion.

4. Unless otherwise provided, a vested zoning right that does not comply with the requirements of this Chapter or the Zoning Map constitutes a nonconformity subject to the provisions of Article 8 of this Chapter.

5. Unless otherwise provided, a vested zoning right is not a personal right but shall attach to and run with the applicable property.

b. *Limitations* – The establishment of a vested zoning right does not preclude the following:

1. The application of a zone that imposes additional requirements but does not affect the allowable type or intensity of use~~.~~;

2. The application ~~to any uncompleted construction~~ of an amendment to any building code (including but not limited to fire, life safety, plumbing, electrical, mechanical, and "green" building codes) or to any environmental laws or regulations (including but not limited to those pertaining to stormwater management, water quality, water and sewer, floodplains and wetlands, forest and tree preservation and conservation, landscaping and screening, publicly accessible art, and trash and recycling), to any uncompleted construction~~unless construction has proceeded to a stage at which compliance with the amended law or regulation presents a practical difficulty.~~;

3. The application of an amendment to the sign provisions of this Chapter, except with respect to signs existing or in the process of being installed at the time of the amendment subject to the provisions of Article 18 of this Chapter;

4. The application of ordinances or regulations that are general in nature and are applicable to all similarly situated property in the City; or

5. The application of any changes in Federal or State law to which the property may be subject.

Article 2 – Zoning Map

25.02.01 – Zoning Map

The location and boundaries of zones established in the City are as shown on a map adopted on _____ and entitled *Zoning Map of the City of Rockville* as may be amended subsequent to its adoption. The maps, sections, notations, dimensions, designations, references, and other data shown on the map are hereby made a part of this Chapter to the same extent as if the information set forth on the map were fully described and incorporated herein.

25.02.02 – Boundaries of Zones

Where uncertainty exists as to the boundaries of any of the zones as shown on the zoning map, the following rules apply:

1. Where zone boundaries are indicated as approximately following street or alley lines, proposed street lines, or railroad rights-of-way, the zoning boundaries are the centerline of those streets, alleys, or rights-of-way;

2. Where zone boundaries are indicated as approximately following lot lines and are not more than ten feet (10') distant from the property lines of an unplatted property, such lot lines are the boundaries; and

3. Where zoning boundaries are greater than ten feet (10') distant from the property lines of an unplatted property, or where a zone boundary divides an unplatted property, the location of any such zoning boundary is determined by use of the map scale shown on the map to the nearest foot, unless the boundary is indicated by dimensions on the map.

25.02.03 – Properties Divided Between the City and County

Where a record lot is located partially within the City and partially outside the City, the following provisions apply:

1. *Application Filed* – Any person desiring to improve a record lot in accordance with this Section 25.02.03, must submit an application to the City Clerk in accordance with the requirements of Section 25.05.02. As part of its obligation, the applicant must:

   (a) Identify those uses which it intends to implement within the City; and

   (b) Provide a certification, in a form which is acceptable to the City Attorney, that the uses so requested are permissible as set forth in this Section 25.02.03.

2. *Establishment of Hearing and Public Notification* – Upon acceptance for filing an application under this Section 25.02.03, the City Clerk must:

   (a) Set the application for a hearing by the Mayor and Council at a specified date, time, and place; and

   (b) Cause public notice of the hearing to be given in accordance with this Chapter and the requirements of State law.

3. *Planning Commission Review*

   (a) Within five (5) days after accepting the filing of any application under this Section 25.02.03, the City Clerk must transmit a copy of the application to the Planning Commission.

   (b) The Planning Commission may submit a written recommendation, which must be incorporated in the application file, and which becomes part of the record of the application.

4. *Hearing* – Mayor and Council will then hold a hearing on the matter in accordance with State law.

5. *Determination of Permitted Use* – In addition to any uses permitted under this Chapter, an owner of a record lot located both in and outside the corporate limits of the City and which was originally improved in accordance with the zoning laws of the County, may be authorized to implement some or all of such uses as permitted in the County on the portion of the lot located within the City. The Mayor and Council must find that these existing or allowed uses originally approved by the County do not:

   (a) Adversely affect the health and safety of residents or workers in the area;

   (b) Overburden existing public services, including water, sanitary sewer, public roads, storm drainage, and other public improvements;

   (c) Detrimentally affect the use and development of adjacent properties or the neighborhood;

   (d) Change the character of the neighborhood in which the use is proposed considering service currently required, population density, character, and the number of similar land uses; or

   (e) Create a use that is inconsistent with the purposes of this Chapter set forth in Section 25.01.02.

6. *Decision* – An application must be granted by ordinance or denied, dismissed, or allowed to be withdrawn by resolution of the Mayor and Council. In connection with the grant of an application, the Mayor and Council may impose such terms, conditions, and restrictions that are reasonably necessary to protect adjacent properties, the neighborhood, and the residents and workers therein.

7. *Notice of Decision* – Notice of the decision of the Mayor and Council must be given as provided in Section 25.05.06.

25.02.04 - Zoning of Annexed Land

a. *Petition Filed* – When a petition to enlarge the corporate boundaries of the City is submitted to the Mayor and Council in accordance with the requirements of State law, the City Clerk must transmit a copy to the Chief of Planning.

b. *Chief of Planning Review* – The Chief of Planning will review the application for conformance with annexation and land use policies of the Plan. The Chief of Planning will then transmit a copy of the petition to the Planning Commission.

c. *Preliminary Report*

   1. The Planning Commission will study the area proposed to be annexed and prepare a preliminary report recommending the zoning classification or classifications of such property that would be appropriate if it were to be annexed.

   2. The City Clerk must then send a copy of the preliminary report to the applicable state, county, and regional agencies required by law.

d. *Planning Commission Public Hearing and Notice* – The Planning Commission must:

   1. Hold at least one (1) public hearing on the preliminary report, in accordance with the provisions of Section 25.04.02.e.2. and in accordance with the requirements of State law;

   2. Provide at least 15 days' notice of the time and place of the hearing to be published in a paper of general circulation in the City; and

   3. Provide written notice in accordance with the provisions of Section 25.05.03.

e. *Final Report* – Following such hearing, the Planning Commission shall submit its final report to the Mayor and Council.

f. *Mayor and Council Public Hearing and Notice*

1. The Mayor and Council must hold a public hearing on the recommendation and report of the Planning Commission in accordance with State law simultaneously with its hearing on the proposed annexation.

2. Public notice of the Mayor and Council's hearing on the final report must be given in accordance with the requirements of State law.

g. *Amendment of Zoning Map* – The Mayor and Council may adopt an ordinance amending the zoning map to include such property and the zoning classification or classifications thereof, but only after the adoption of a resolution enlarging the corporate boundaries of the City to include such property. Such ordinance is effective the same date the annexation becomes effective under State law.

Article 3 – Definitions; Terms of Measurements and Calculations

25.03.01 – General Rules of Interpretation

The following rules of construction apply to the text of this Chapter:

1. The particular controls the general.

2. In case of any difference of meaning or implication between the text of this Chapter and any caption, illustration, summary table, or illustrative table, the text controls.

3. The words "shall," "may not," and "must" are always mandatory and not discretionary. The words "should" and "may" are permissive.

4. Words used in the present tense also include the future.

5. Words used in the singular number also include the plural; and plural the singular, unless the context clearly indicates the contrary.

6. The phrase "used for" includes "arranged for," "designed for," "intended for," "maintained for," or "occupied for."

7. Words or terms not otherwise included are defined by their common dictionary meaning.

8. Unless the context clearly indicates the contrary, where a regulation involves two (2) or more items, conditions, provisions, or events connected by the conjunctions "and," "or," or "either…or," the conjunction will be interpreted as follows:

   (a) When used to connect a list of requirements or required conditions, "and" indicates that all the connected items apply.

   (b) When used to connect a list of permitted items or events, "and" indicates that the items or events are permitted singly or in any combination.

   (c) "Or" indicates that the connected items, conditions, provisions, or events may apply singly or in any combination.

   (d) "And…or" indicates that the connected items, conditions, provisions, or events will apply singly or in combination.

(e) "Either…or" indicates that the connected items, conditions, provisions, or events will apply singly but not in combination.

(f) The word "includes" does not limit a term to the specified examples, but is intended to extend its meaning to all other instances or circumstances of like kind or character, and has the same meaning as "includes but is not limited to."

9. All terms appearing in this Chapter that are defined under various sections of the City Building Code have the meanings specified in the Building Code except where specifically defined in this Chapter; however, in case of a conflict, the more restrictive meaning applies.

10. The word "State" means the State of Maryland. The word "County" means the County of Montgomery County, Maryland, and the term "City" means the City of Rockville, Maryland.

25.03.02 – Words and Terms Defined

Abutting or Adjoining - Having a common point or border.

Accessory Apartment

1. A second dwelling unit that is:

   (a) Part of and subordinate to an existing single unit detached dwelling; and

   (b) Contains cooking, eating, sanitation, and sleeping facilities.

2. An accessory apartment is not an accessory use or a home-based business enterprise as defined in this Chapter.

Accessory Drive-Through Window - A drive-through window which is incidental to the primary use of the structure and which consist of one (1) drive-through window and an associated single queue lane. An accessory drive-through window is a special exception use under this Chapter.

Accessory Swimming Pool – See "Swimming Pool, Accessory."

Accessory Use – See "Use, Accessory."

Adjacent - Near or close to but not necessarily touching.

Administrative Adjustment - A modification of certain regulations in Single Dwelling Unit Residential Zones by the Chief of Planning as set forth in Section 25.06.06.

Adult Day Care Center - A licensed facility in which day care services, reception and/or care are provided to four (4) or more persons over the age of 16, for any part of a 24 hour period in accordance with all applicable State and County laws and regulations.

Adult Oriented Establishment - Any commercial establishment which devotes either 250 or more square feet or five percent (5%) of its gross floor area, whichever is smaller, to the retailing, distributing, exhibiting, and/or storing of sexually oriented materials, or to affording customers the opportunity to engage in sexually oriented activities.

1. The term includes, but is not limited to, the following establishments which meet the criteria of this definition: bookstores, live theaters, motion picture theaters or arcades, massage parlors, model studios, and nightclubs; but does not include hotels or motels.

2. Live theaters or motion picture theaters do not meet this definition unless a predominance of the pictures or performances exhibited constitute sexually oriented materials as defined herein.

Alley - ~~A passage or way open to public travel whether publicly or privately owned, generally affording a secondary means of vehicular access to abutting lots and not intended for general traffic circulation.~~A right-of-way that provides secondary access for vehicles to the side and rear of abutting properties. A private driveway is not an alley.

Alteration, Substantial Exterior – For purposes of this Chapter, an exterior alteration is deemed to be substantial if one of the following conditions results:

1. The removal of more than 50% of the total exterior wall surfaces from the grade up; or

2. The removal of more than 50% of the roof area (as measured in vertical plan view); or

3. The removal of any wall facing a public street.

Alteration, Structural - Any change to a building or structure including, but not limited to:

1. Bearing walls;

2. Load-bearing columns;

3. Beams or girders;

4. An enlargement or reduction in the gross floor area or building height; and/or

5. Any s~~Any substantial change in the roof or exterior walls~~substantial exterior alteration.

Amenity - A natural or created feature that enhances the aesthetic quality or visual appeal or makes more attractive or satisfying a particular property, place, or area.

Animal Hospital - A facility staffed by at least one (1) veterinarian licensed by the State for the medical treatment and care of animals; and which keeps animals overnight only for medical purposes.

Antenna - Any structure or device used to collect, receive, transmit, or radiate electromagnetic waves, including both directional antennae (such as panels, microwave dishes, satellite earth station antennae over two (2) meters in diameter) and omni-directional antennae (such as whips). This term does not include antennae two (2) meters or less in diameter, and antennae regulated by 47 C.F.R. Section 1.4000, as amended.

Antenna Support Structure - A structure designed for the primary purpose of supporting one (1) or more antennae (including telescoping mast, tower, monopole, tethered blimp, or other support structure). The term includes structures located on buildings or other structures, ground-mounted, or tethered.

Apartment, Accessory – See "Accessory Apartment."

Apartment Building - See "Dwelling, Multiple-Unit."

Applicant - A person submitting an application for development.

Approving Authority - The elected or appointed body or other City representative authorized by this Chapter to render a final decision on specific application requests administered under the Chapter.

Archaeological Site - A location that contains physical evidence of past human activities for which a boundary can be established and which derives its primary

documentary and interpretive information through archaeological research techniques.

Atrium - A space enclosed within a building that is open and unobstructed from the floor level to the roof of the building.

Attached Dwelling Unit – See "Dwelling Unit, Attached."

Automobile Filling Station - A building, lot, or both having pumps and fuel storage tanks for dispensing or selling for retail sale and where repair service is incidental. An automobile filling station is in one (1) of two (2) classes, as follows:

1. *Class I* - The retailing of groceries is incidental, and no storage or parking space is offered for rent.

2. *Class II* – The retailing of groceries is incidental, no storage or parking space is offered for rent, and a mechanical car wash is included as an integral part of the site.

Automobile Fluid Maintenance Station - Any area of land, including buildings and other structures thereon, that is used to service the routine fluid maintenance of a motor vehicle, including engine, transmission, differential, power steering, battery, brakes cooling, and windshield washer systems; and where no general motor vehicle repair, junk, and auto wrecking business is conducted.

Automobile Parking Facility - "See Parking Facility"

Automobile Parking Lot, Commercial – "See Commercial Parking Lot"

Automobile Parking Structure - A public or private building or structure, or part of the same, designed and used for the parking of motor vehicles, with or without compensation.

Automobile Repair Garage - A building where the business of general motor vehicle repair and service such as engine work or body repair is conducted within the building, but excluding a junk and/or auto wrecking business.

Awning - A retractable cover that can be extended from a building wall to provide shade or cover to the pedestrian area below.

Banner - Any sign or string of one (1) or more signs, usually made of cloth or other lightweight material, which is used to attract attention, whether or not imprinted with words or characters, including but not limited to balloons and pennants.

Basement - That portion of a building below the first floor joists, at least half of whose clear ceiling height is below ~~above~~ the level of the adjacent finished grade.

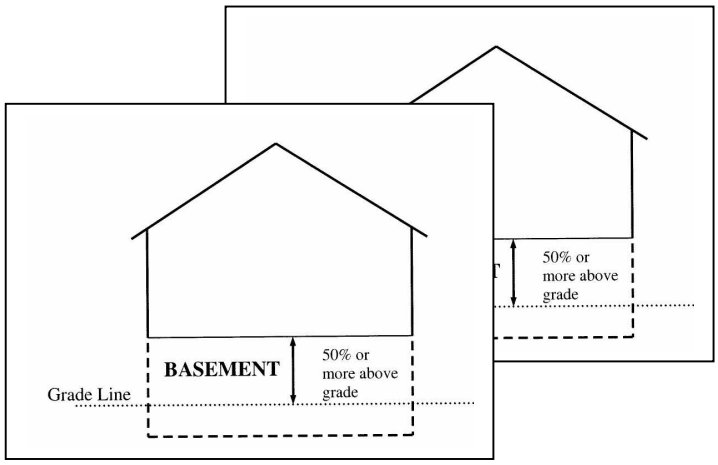

Bed and Breakfast Lodging

1. A single-unit detached dwelling that:

   (a) Is owner-occupied;

   (b) Provides a guest room or rooms within the dwelling, for compensation, as overnight accommodations for transient visitors who remain no longer than two (2) weeks in any one (1) visit; and

   (c) Customarily serves breakfast which is included in the charge for the room.

2. A bed-and-breakfast lodging is not a hotel, motel, inn, restaurant, home-based business enterprise, or other use as defined or regulated elsewhere in this Chapter.

Bicycle Parking – A stationary rack, locker, or similar structure that supports a bicycle in a stable position and to which the user can lock the bicycle with a cable or chain and lock.

1. *Bicycle Parking, Long Term* - Parking for bicycles located in a secure and weather-protected area where the bicycles will remain for several hours.

2. *Bicycle Parking, Short Term* - Parking for bicycles that will be left for short stops and can consist of either racks or lockers.

Bicycle Storage Facility - Areas, structures, and other devices to accommodate the short-term or long-term parking or storage of bicycles.

Bikeway - A pathway designed to accommodate bicycling, and which pedestrians may also share. A bikeway may be classified in accordance with the Bikeway Master Plan.

Board, The - The Board of Appeals of the City, unless otherwise specified.

Boardinghouse - A dwelling in which lodging or meals, or both, are furnished to three (3) or more guests for compensation. A boarding house is not considered a home-based business enterprise.

Buildable Lot – See "Lot, Buildable."

Building - A structure having one (1) or more stories and a roof, designed primarily for the shelter, support, or enclosure of persons, animals, or property of any kind.

1. *Building, Accessory* - A building subordinate to, and located on the same lot with a main building, the use of which is clearly incidental to that of the main building or to the use of the land, and which is not attached by any part of a common wall or common roof to the main building.

2. *Building, Main* - A building in which is conducted the principal use of the lot on which it is situated. In any residential zone, any dwelling shall be deemed to be a main building on the lot on which the same is located.

Building Footprint – See "Footprint".

Building Line - A line tracing the foundation wall or any enclosed porch, vestibule, or other enclosed portion of a building.

Building Permit - An official City document or certification authorizing the construction, alteration, enlargement, conversion, reconstruction, remodeling, rehabilitation, erection, moving, or repair of a building or structure.

Building Sign – See "Sign, Building."

Build-To Line - The line at which construction of a building, excluding permissible encroachments provided in Section 25.09.05, is required to occur on a lot. A build-to line typically runs parallel to the front property line and is established to create an even building façade line on a street.

Business Equipment Sales and Services - Retail services directed primarily to the support of office functions. Such uses may include duplicating services, office furniture sales and service, private postal service, medical supplies and equipment,

and/or scientific and laboratory supplies. Items separately regulated in this Chapter are not included in this definition.

Canopy - A marquee, porte-cochere, or other unenclosed covering structure projecting from and attached to a building, with or without supporting members, protecting pedestrians and vehicles outside of an entrance doorway from inclement weather.

Capital Improvements Program (CIP) - A schedule of future public improvements adopted annually by the Mayor and Council to provide a means of estimating construction schedules, costs, and means of financing projects such as roads, sewer and water systems, and parks, or improvements to the same.

Car Wash, Mechanical - A place or structure used for the washing of automobiles in which all or part of the washing function is performed by mechanical equipment.

Carry-Out - An establishment where ready-to-eat food products are sold at retail primarily for consumption off the premises and not having drive-through or walk-up window services. Such an establishment is not considered ~~as~~ to be a restaurant.

Caterer - An establishment licensed to prepare food for delivery and consumption off the premises.

Cellar – That portion of a building below the first floor joists at least half of whose clear ceiling height is below the level of the adjacent ground.

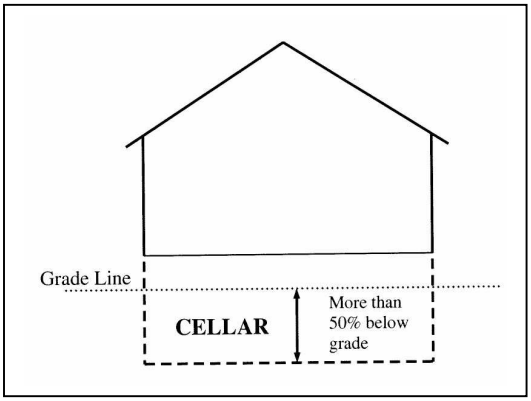

Cemetery - A place used for the permanent interment of dead human or animal bodies or the cremated remains thereof. It may be either:

1. A burial park for earth interments;
2. A mausoleum for vault or crypt interments;
3. A columbarium for cinerary interments; or
4. A combination of one (1) or more thereof.

Centerline of a Street – See "Street, Centerline of"

Certificate of Approval - An official city document issued under the auspices of the Historic District Commission authorizing the construction, alteration, enlargement, conversion, reconstruction, remodeling, rehabilitation, erection, demolition, moving, or repair of the exterior of a building or structure or the alteration of the environmental setting of a site within a designated Historic District Zone (multi-site or single-site) in the City.

Charitable or Philanthropic Institution

1. The office or operations facility for a private, non-profit, and tax-exempt organization which is not organized or operated for the purpose of carrying on a trade or business, which provides either:

   (a) Volunteer aid to the sick and wounded of the armed forces in time of war and national relief in case of great national calamities; or

   (b) Any of the following: religious, social, physical, recreational, and/or benevolent services.

2. No member of the organization can benefit directly from the net earnings of the organization.

Chief of Inspection Services - The individual holding the position of Chief of Inspection Services within the City's Department of Community Planning and Development Services or such individual's designee.

Chief of Planning - The individual holding the position of Chief of Planning within the City's Department of Community Planning and Development Services or such individual's designee.

Child Care Center - A building or residence in which child day care services are provided to more than eight (8) children at any one (1) time in accordance with all applicable State and County laws and regulations.

Child Care Home - A private residence in which a registered family day care provider cares for up to eight (8) children for compensation for any part of a 24 hour period in accordance with all applicable State and County laws and regulations.

Code - The compilation of the laws of the City of Rockville, otherwise known as the Rockville City Code.

Collocation - The use of a wireless telecommunication facility by more than one (1) wireless service provider.

Columbarium - A building or structure located primarily above-ground and used for the interment of the cremated remains of deceased persons or animals.

Commercial Parking Facility - A lot, structure, or portion thereof, other than an automobile sales lot, held out or used for the storage or parking of six (6) or more motor vehicles for compensation as the principal use of the property.

Commercial Sign - See "Sign, Commercial."

Commission, The - The Planning Commission of the City, unless otherwise specified.

Comprehensive Transportation Review (CTR) - An analysis that addresses requirements for multimodal transportation facilities, automobile traffic standards, and site access and circulation for the purpose of assuring adequate transportation facilities to serve proposed development.

Conditional Use - See "Use, Conditional."

Confronting - Properties directly opposite each other, and separated only by public right-of-way.

Consumable Good to Be Used in the Home - Products used in the home that must be replenished on a regular basis, including but not limited to groceries, baked goods, hobby and craft supplies, pharmaceuticals, personal care items, and similar products. Items that are separately regulated in this Chapter are not included in this definition.

Contiguous– Sharing an edge or boundary; touching and not separated by other property or a public street or alley.

Copy – For purposes of signs, copy means the content of a sign.

Corner Lot – See "Lot, Corner."

Cornice - An architectural feature or design element on a building façade that denotes the roof line of the building.

Courtyard - An open space uncovered to the sky, bounded by buildings.

1. *Courtyard, Inner* - The open space formed on four (4) sides by building walls.

2. *Courtyard, Outer* - The open space bounded on three (3) sides by building walls.

Coverage - See "Lot Coverage."

Crematorium - An establishment used for the cremation of the remains of deceased persons or animals.

Crosswalk - A specially paved or marked path for pedestrians crossing a street, road or other vehicular driveway.

Cul-de-Sac - A secondary street with only one (1) outlet and having an appropriate terminal for the convenient reversal of traffic movement.

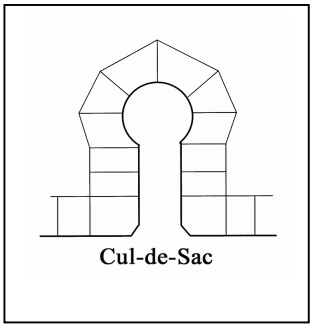

Day Care Center, Adult – See "Adult Day Care Center."

Decision - The final determination of an Approving Authority.

Deck - An uncovered accessory structure attached to a dwelling and providing a level outdoor recreation space elevated at least six (6) inches from the ground level.

Demolition - The complete razing of a building or structure~~; ***or***~~.

~~1.The removal of more than 50% of the total exterior wall surfaces from the grade up;~~

~~2. The removal of more than 50% of the roof area (as measured in vertical plan view); or~~

~~3. The removal of any wall facing a public street.~~

Demolition by Neglect of Historic Properties - Failure to maintain property, or any component thereof, located within a designated Historic District Zone so as to jeopardize the historic integrity of the property.

Dental Clinic - An establishment where patients are accepted for specialized study and/or treatment by a group of two (2) or more dentists practicing dentistry together.

Development - Any activity, other than unimproved open space activity, which materially affects the existing condition or use of any land or structure.

Development Standard Nonconformity - A building, structure, or improvement that was lawful when established but no longer conforms to development standards of the zone in which it is located, as set forth in this Chapter (such as, but not limited to, parking, lot coverage, green space, etc.), because of the adoption or amendment of this Chapter or zoning map.

Directional Sign – See "Sign, Directional."

Domestic Partnership – Two (2) individuals of the same or different genders who have registered as a domestic partnership in a jurisdiction where such a registration system exists, or who share a close personal relationship for each other's welfare, and share financial and legal obligations.

Dormitory - A building or portion thereof used for sleeping purposes in connection with a school, college, or other institution.

Drive-Through Window, Accessory – See "Accessory Drive-Through Window."

Durable Goods to Be Used in the Home - Items for use in the home that last for a significant time span, including but not limited to bicycles, home electronics equipment, household appliances, paint and wallpaper supplies, hardware, home furniture and furnishings, floor coverings, antiques, and similar items. Other items separately regulated in this Chapter are not included in this definition.

Dwelling Unit - A building or portion thereof providing complete living facilities for not more than one (1) family, including, at a minimum, facilities for cooking, sanitation, and sleeping.

1. *Dwelling, Attached* - One (1) of a group of three (3) or more single dwelling units sharing common party walls or floors. Each dwelling unit must have one (1) direct entrance from the outside.

2. *Dwelling, Duplex* - See "Dwelling, semidetached."

3. *Dwelling, Multiple-Unit (Apartment Building)* - A building containing three (3) or more dwelling units which may or may not share a common entry.

4. *Dwelling, Semidetached (Duplex)* - One (1) of two (2) single unit attached dwellings located on abutting lots meeting the following criteria:

   (a) The dwellings are joined by a party wall along the common lot line and extending from the basement floor to the highest point of the roof with no openings; and

   (b) No other buildings or structures adjoin either dwelling unit.

5. *Dwelling, Single Unit Detached* - A building designed and intended for use as a single dwelling and entirely separated from any other building or structure

on all sides. A single unit detached dwelling may include an accessory apartment approved by special exception.

6. *Dwelling, Townhouse* - One (1) of a group of three (3) or more single unit dwellings separated from each other by a party wall extending from the basement floor to the highest point of the roof with no openings. Each dwelling unit must have two (2) separate entrances from the outside.

Easement - A grant or reservation by the owner of land for the use of all or a portion of such property to the public or others, for a specific purpose.

Educational Institution, Private

1. A private school or training institution which offers a formal educational program.

2. This term does not include any establishment having a single teacher, tutor, instructor, or supervisor teaching a maximum of four (4) persons at any one (1) time.

Election Sign – See "Sign, Election."

Environmental Guidelines – A document adopted in July 1999 by the Mayor and Council ~~for~~ establishing guidelines for the protection and enhancement of the City's natural resources, as that document may be amended or revised.

Environmental Setting - The area associated with a site within a designated Historic District Zone, including buildings and grounds.

Equipment Enclosure – For purposes of a wireless communication facility, a freestanding or mounted structure, shelter, cabinet, or vault used to house and to protect the electronic equipment and associated equipment necessary for processing wireless communication signals. Associated equipment may include air conditioners, back-up power supplies, and emergency generators.

Established Setback – Where the majority of lots located on one (1) side of a street between two (2) intersecting streets are occupied by buildings having a front setback different from the standard specified, all buildings must conform to the setback line thus established up to the maximum specified in the zone.

Expression Line - An architectural feature or design element on a building façade that indicates a demarcation between floor levels.

Façade - The exterior walls of a building or structure exposed to public view or that wall viewed by a person not within the building.

Family - An individual, or two (2) or more persons, all of whom are related to each other by blood, marriage, domestic partnership, adoption, guardianship or other duly authorized custodial relationship, or a group of not more than five (5) persons all of whom are not related to each other by blood, marriage, domestic partnership, adoption, guardianship, or other duly authorized custodial relationship, living together as a single housekeeping group in a dwelling unit.

Fence - A vertical structure used to delineate a boundary or act as a barrier or means of protection, confinement, or screening. This term includes walls used for the purpose of a lot boundary demarcation.

Firearm - A rifle, shotgun, revolver, pistol, airgun, air rifle, and any similar mechanism, by whatever name known, which is designed to expel a projectile through a gun barrel by the action of any explosive, gas, compressed air, spring, or elastic and including any such mechanism that is loaded with blank or live cartridges or projectiles of any kind.

Flag - Any fabric containing distinctive colors, patterns, or symbols, used as an ornamental flag or as a symbol of a government, political subdivision, or other entity.

Flag, Ornamental - Any fabric or similar material designed to be flown as a flag and containing patterns, drawings, or symbols used for decorative purposes and is noncommercial in nature.

Flea Market - A group of vendors assembled in an open area or a structure on an occasional or periodic basis and offer goods for trade or sale to the general public.

Floodplain – Means the normally *dry land adjoining a river, stream or watercourse that is temporaraily subject to partial or complete inundation by storms that exceed the capacity of the channel. Floodplains are delineated dby the expected frequency of flooding. The 100-year floodplain delineates the area subject to flooding, on average, once every 100 years; thus it has a 1% chance of flooding any given year.*

~~1.A relatively flat or low land area adjoining a river, stream, or watercourse which is subject to partial or complete inundation by water as defined or delineated on the latest FEMA flood maps; or~~

~~2.An area subject to the unusual and rapid accumulation or runoff of surface waters from any source.~~

Footprint - With regard to a building, the area encompassed by a building's outer wall at ground level.

Freestanding Sign – See "Sign, Freestanding."

Front Lot Line – See "Lot Line, Front."

Front Yard – See "Yard, Front."

Frontage - The length of the front property line of the lot or tract of land abutting a public street.

Funeral Home

1. An establishment providing any or all of the following services:

   (a) Temporary holding and transporting of human remains to and from the premises;

   (b) Embalming and preparation of remains;

   (c) Visiting of the premises by family members and the public for the purpose of viewing the remains and conducting funeral and memorial services; and/or

   (d) Organizing funeral processions.

2. A crematorium is not included in this definition.

Glare - A harsh brilliance from a direct or reflected light source that causes the observer to squint, shield, or avert the eyes.

Gross Floor Area

1. The total number of square feet of floor area in a building,

   (a) Excluding uncovered steps, uncovered porches, atriums, rooftop mechanical equipment enclosures, and off-street parking; but

   (b) Including basements and/or attics designed and available for tenant use or occupancy.

2. All measurements must be made between exterior faces of walls or the centerline of walls of abutting buildings, foundations, piers, or other means of support.

Group Home - A facility licensed, funded, certified, or registered by the State or the County operating as a group home or domiciliary care home offering residential accommodations, supervision, or assisted community living for the residents. The number of residents includes members of the staff who reside at the group home, but does not include infants less than two (2) months old. Group homes are classified as follows:

1. *Group Home, Small* – A group home for three (3), but not more than eight (8), residents.

2. *Group Home, Large* – A group home for nine (9), but not more than 16, residents or the limit set by State law, whichever is less.

Half Story – See "Story, Half."

Hazardous Material - Any material that, because of its quantity, concentration, or physical or chemical characteristics, poses a significant present or potential hazard to human health and safety or to the environment if released into the home, workplace, or the environment.

Health and Fitness Establishment- A membership facility providing space and specialized equipment for exercise individually or in a group.

Health Professional - A person licensed or certified by a board administered by the Maryland Department of Health and Mental Hygiene.

Heavy Industrial Use - Production of service operations that require heavy machinery and may produce air or waste pollution, dust, noise, smoke, odors, or other potentially adverse emanations. Such uses include, but are not limited to, concrete or asphalt batch plants; machine shops; trucking terminals; foundries; sawmills; alcoholic beverage production; junk yards, and recycling facilities; fertilizer mixing; and similar uses. Items separately regulated in this Chapter are not included in this definition.

Home Improvement Service – Services that supply, install, or maintain the constructed elements, plumbing, and electrical wiring of homes, such as plumber; electrician; carpenter; and specialty trade contractors providing services to alter, remodel, repair or replace a building or part of a building used as a residence, including but not limited to roofing, flooring, tiling, windows, brick and stone masonry. Items separately regulated in this Chapter are not included in this definition.

Home Maintenance Service - Services that supply, install, or maintain durable goods in homes such as locksmith; household appliance repair; upholstering, glass studio sales and installation; picture framing; interior decorator; and similar services for the upkeep of the home. Items separately regulated in this Chapter are not included in this definition.

Home-Based Business Enterprise - Any occupation that provides a service or product and is conducted within a dwelling unit by a resident or residents of the dwelling unit without diminishing its residential character.

1. A home-based business enterprise is not an accessory use.

2. A home-based business enterprise does not include the following: bed-and-breakfast establishment, boardinghouse, day care facility, display of goods not associated with a home-based business enterprise, landscape contractor, private educational institution, tourist home, or the repair and maintenance of motor vehicles.

3. Work at home in connection with off premises employment not involving any visits to the site, such as telecommuting, is not considered a home-based business enterprise but is permitted in all residential dwellings as an accessory use.

Hospital - Any institution receiving inpatients and rendering medical care, including but not limited to general hospitals and institutions in which service is limited to special fields such as cardiac, eye, ear, nose and throat, pediatric, orthopedic, skin and cancer, mental, tuberculosis, chronic disease, and obstetrics. The term "hospital" shall also include sanitariums, including but not limited to, those treating inpatient physical or mental disorders or substance abuse.

Hotel (including motel) - Any building containing rooms or suites of rooms designed and intended for the temporary lodging of guests, and which are available to the general public for compensation.

Housing for Senior Adults and Persons with Disabilities - A building or buildings containing dwelling units and related services and facilities for senior adults or persons with disabilities. Occupancy is restricted as provided in Section 25.15.02.j.4. The use may also include facilities for such services to residents as meal preparation and service, day care, personal care, nursing, or therapy, or any service to the senior adult or disabled population of the community that is an ancillary part of any of the above operations.

Impervious Surface - An area that prevents or severely restricts water from reaching the sub-surface and recharging groundwater. This condition can be caused by a structure, paving, compacted soil or gravel or other feature that forms a barrier between precipitation and the earth's surface. Impervious surface also includes elevated structures, such as a bridge or deck regardless of whether the land surface beneath it itself is pervious or impervious.

Improvement - Any building, structure, road, driveway, parking or loading area, pedestrian path, landscaping, screening, fencing, or recreational facility.

Improvement, Public - Any or all of the following improvements for the benefit of the public generally: roads and streets, alleys, grading, road pavement, fire hydrants, curbs and gutters, sidewalks, crosswalks and pedestrian paths, water mains, sanitary sewer lines, storm drains, drainage structures, rain gardens, stormwater swales, curb returns, sidewalks and driveway entrances in rights-of-way, guardrails, retaining walls, sodding, planting, monuments, streetlights, and other infrastructure owned by the City or other governmental entities.

Initial Approving Documents - The collection of documents that establish the density, use, and development standards that guide the build out of a planned development located in any of the Planned Development zones contained in Article 14 of the chapter. Those documents include one or more of the following:

a. Any resolution of approval by the Mayor and Council and any subsequent amendment thereto including any attachments;

b. Any preliminary development plan approval by the Planning Commission and any subsequent amendment thereto including any attachments;

c. Any annexation agreement or other development agreement;

d. The provisions of this Chapter applicable to the particular planned development at the time of, and not inconsistent with, the resolution of approval or the approved Preliminary Development Plan.

Interim Historic Review - That period of time between the initiation of the historic designation process as set forth in Sec. 25.14.01.d.1 and the final determination by the Mayor and Council as to whether the property is historic.

Interior Lot - See "Lot, Interior."

Junk Yard - Any land or building used for the abandonment, storage, keeping, collecting or baling of paper, rags, scrap metals, other scrap or discarded materials, or

for the abandonment of inoperable automobiles or other vehicles, machinery, or associated parts.

Kennel - Any building or land used, designed, or arranged for the boarding, breeding, or care of dogs or cats.

Kitchen - Any room or area used or intended to be used for the preparation and cooking of food. The presence of a range or oven, or utility connections suitable for servicing a range or oven establishes a kitchen.

Laboratory, Dental - A place where dental bridgework and orthodontic appliances are made.

Laboratory, Medical - A place for the testing and classification of human tissue at the request of a physician for a particular patient.

Laboratory, Research - A facility for scientific research in the fields of physics, chemistry, medicine, genetics, biotechnology, and similar fields of inquiry.

Landscaping - Grass, trees, hedges, shrubs, vines, ground covers, or flowers planted and maintained to enhance the appearance of a development. Landscaping may include non-botanical features such as walks, fountains, reflecting pools, art works, rain gardens, stormwater management features, screens, walls, fences, and benches.

Landscaping, Screening, and Lighting Manual - A document adopted by the Mayor and Council that sets out the parameters for tree planting and landscaping installation, including guidelines for location and varieties of plantings. The manual also includes standards for the design and performance of exterior lighting installations.

Law - Any law, ordinance, or resolution or regulation having the effect of law, whether adopted by the Federal, State, County, City, or other unit of government or agency thereof.

Life Care Facility - A facility housed in a single building or group of buildings that provides for continuing progressive care of residents. Occupancy is restricted as provided in Article 70B of the Annotated Code of Maryland, as amended, and any other applicable provisions issued by the Maryland Health Resources Planning Commission. A life care facility must include dwelling units for either independent or assisted living, or both, plus a nursing home of a suitable size to provide treatment or care of the residents; it may include ancillary facilities for the further enjoyment, service or care of the residents.

Light Industrial Uses - Light manufacturing and industrial support services that may involve fabrication and assembly of materials. Such uses include, but are not limited

to contractor's storage yards; cold storage facility; wholesaling; general warehousing; commercial greenhouses; printing and publishing; outdoor parking and storage; bottling plant; ice plants; dry cleaning plant; manufacture of light sheet metal products; automotive body shop and repairs; manufacturing, compounding or assembly of articles from previously prepared materials; roofing services; blacksmith; manufacture of electrical and electronic equipment and precision instruments; and similar uses. Items separately regulated in this Chapter are not included in this definition.

Live/Work Unit –A building or spaces within a building used jointly for commercial and residential purposes where the residential use of the space is secondary or accessory to the primary use as a place of work.

Loading Space - An off-street space used only for the parking of a vehicle while loading or unloading goods or materials and which cannot be counted towards the off-street parking requirement.

Lot - A parcel or quantity of land. Lots include the following:

1. *Lot, Buildable* - Any record lot meeting the minimum lot area and frontage requirements of the zone in which it is located.

2. *Lot, Corner* - A lot abutting ~~at~~ the intersection of two (2) or more streets where the interior angle of the intersection does not exceed 135 degrees.

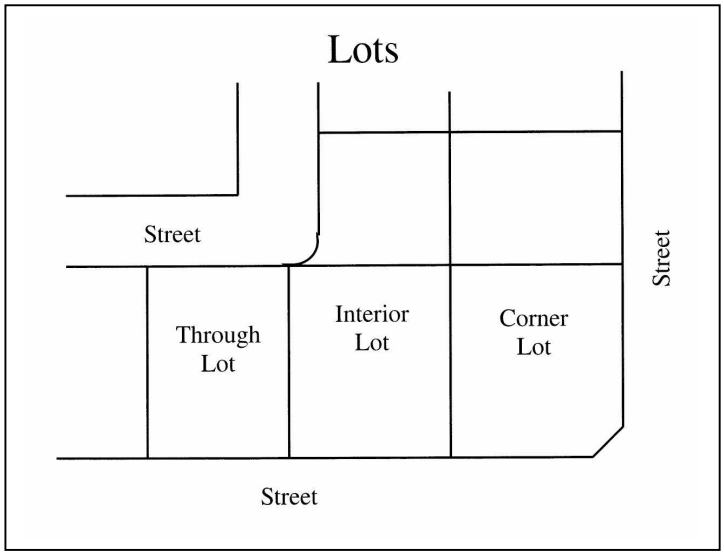

3. *Lot, Interior* - Any lot other than a corner lot, including a through lot.

4. *Lot, Ownership* - Land designated as a separate and distinct parcel of land for purposes of ownership on a legally recorded ownership plat filed among the land records of the County. Any land so designated shall not constitute a record lot or plan of subdivision.

5. *Lot, Pipe Stem* – See "Pipe Stem Lot."

6. *Lot, Qualifying* - A lot with a net area of less than 6,000 square feet but at least 5,000 square feet, or with a width at the front building line of less than 60 feet but at least 50 feet shown on a plat or deed recorded prior to October 1, 1957.

7. *Lot, Record* - The land designated as a separate and distinct parcel of land on a legally recorded subdivision plat filed among the land records of the County, but does not include land identified on any such plat as an outlot or an ownership lot shown on an ownership plat.

8. *Lot, Through* - An interior lot fronting on two (2) or more streets that do not intersect adjacent to the lot.

Lot Coverage - The percentage of lot area covered by buildings (or structures), including covered porches and accessory buildings.

Lot Line - The lines bounding a record lot or deeded lot, as herein defined:

1. *Lot Line, Front* - The street line running along the front of the lot and separating it from the street. In a through lot and a corner lot, both lines abutting the street are deemed to be front lot lines.

2. *Lot Line, Rear* - The lot line generally opposite or parallel to the front lot line, except in a through lot. If the rear lot line is less than ten feet (10') long or the lot comes to a point at the rear, the rear lot line is assumed to be a line not less than ten feet (10') long, lying wholly within the lot, parallel to the front lot line, or in the case of a curved front lot line, parallel to the chord of the arc of the front lot line.

3. *Lot Line, Side* - The lot lines connecting the front and rear lot lines.

Manufacturing - The mechanical or chemical transformation of materials or substances into new products, including the assembling of component parts, the creation of products, and the blending of materials, such as lubricating oils, plastics, resins, or liquors.

Map Amendment - A change in the zoning designation(s) of a property or area as depicted on the Zoning Map for the City. A map amendment may be one (1) of the following:

1. *Comprehensive Map Amendment* - A zoning action affecting the entire City that may rezone some or all areas of the City and reconfirm the zoning in other areas of the City.

2. *Local Map Amendment* - A change of zoning, normally sought by a property owner or other person having a proprietary interest in the property to be affected by the amendment. A local map amendment can include more than one (1) tract of land. Land can be combined for the purpose of rezoning. All portions of the property rezoned must be classified in one (1) zone or two (2) alternative zones.

3. *Sectional Map Amendment* – A zoning action affecting a section of the City. A sectional map amendment is a type of comprehensive amendment as defined by Maryland case law.

Medical Clinic ~~*Building*~~ - An establishment where patients are accepted on an outpatient basis for specialized study and/or treatment by a group of physicians practicing medicine together.

Metes and Bounds - A system of describing and identifying land by measurement (metes) and compass direction (bounds) from an identifiable point of reference such as a monument, marker, point of intersection, stone, or other permanent feature.

Mezzanine - A partial story projecting out over the floor below and no larger than one-third (1/3) of a main floor.

Mid-Block Access - A ~~public way~~ path within a block, intended primarily for pedestrians and bicycles and from which motor-propelled vehicles are excluded, and which is designed to improve access to adjacent roads or lots.

Minor Subdivision – See "Subdivision, Minor."

Mixed-Use Development - A development containing any combination of office, commercial, and residential uses integrated vertically or horizontally.

Mobile Use - A self-contained mobile unit in which general and professional offices are operated. All functional necessities for the operation of the use such as water, sanitary facilities, power, etc., shall be self-contained and the unit shall have its own motive power. Trailers which require a separate locomotion unit shall not be considered a mobile unit.

Monument Sign – See "Sign, Monument."

Motor Vehicle and Trailer Sales Lot - A lot arranged, designed, or used for the storage and display for sale of any motor vehicle or any type of trailer.

Multiple-Unit Dwelling – See "Dwelling, Multiple-Unit.'

Noncommercial Sign – See "Sign, Noncommercial."

Nonconforming Sign – See "Sign, Nonconforming."

Nonconforming Use - A use that was lawful when established but no longer conforms to the requirements of the zone in which it is located because of the adoption or amendment of the zoning ordinance or zoning map.

Nonconformity, Development Standard – See "Development Standard Nonconformity."

Nursing Home - A facility licensed, funded, or registered by the State of Maryland or the County devoted primarily to the maintenance and operation of resources for the treatment and care of persons suffering from illness, disease, aging, or injury and not requiring acute care that is normally provided in a hospital, but who require care in excess of room and board and who need the availability of on-site medical, nursing, convalescent, or chronic care.

Occupant Identification Sign – See "Sign, Occupant Identification."

Off-Premises Sign – See "Sign, Off-Premises."

~~*Office / Business Equipment Sales and Services* - Retail services directed primarily to the support of office functions. Such uses may include duplicating services, office furniture sales and service, private postal service, medical supplies and equipment, and/or scientific and laboratory supplies. Items separately regulated in this Chapter are not included in this definition.~~

Open Area - An area of land associated with and located on the same tract of land as a major building or group of buildings providing light and air, scenic or recreational space, or other similar purpose.

1. Open area shall, in general, be available for entry and use by the occupants of the building involved, but may include space so located and treated as to enhance the amenity of the development by providing landscaping features, screening for the benefit of the occupants or those in neighboring areas, or a general appearance of openness.

2. Open area may include, but not be limited to, lawns, decorative planting, sidewalks and walkways, and active and passive recreation areas, including children's playgrounds, fountains, swimming pools, wooded areas, and watercourses; but shall not include parking lots or vehicular surfaces, accessory buildings other than swimming pools, or areas of open space so

located or so small or so circumscribed by buildings, parking, or drainage areas as to have no substantial value for the purposes stated in this paragraph.

Ornamental Flag – See "Flag, ornamental."

Outlot - An unbuildable parcel of land which has not been included on a recorded plat as a numbered lot due to insufficient size or frontage, poor topography, lack of accessibility, or other reasons.

Overlay Zone - A geographic area that constitutes a mapped district superimposed over the underlying base zone on the official zoning map. An overlay zone includes development regulations and standards that either add to or modify the requirements of the underlying zone.

Owner - The owner of property as shown on the assessment records of the State Department of Assessments and Taxation.

Ownership Lot – See "Lot, Ownership."

Ownership Plat - A plat legally recorded and filed among the land records of the County which designates land as separate lots for purposes of ownership identification only. An ownership plat is not a plat of subdivision.

Parcel - A contiguous area of land described in a single description by a deed or other instrument or as one (1) of a number of lots on a plat or plan, capable of being separately conveyed.

Park - Land owned or administered by a branch of government and available to the general public for recreational purposes.

Parking Lot - See "Parking Facility".

Parking Facility - A lot and/or structure or portion thereof used for the storage or parking of automobiles, incidental to an office, commercial, institutional, recreational, ~~or~~ industrial use, or residential use other than for a single-unit detached or semi-detached dwelling, with or without compensation.

Party of Record - Any person who registers an appearance at a public hearing or proceeding, either through direct testimony or written submission, or who provides written notice of intent to participate in a public hearing or proceeding.

Patio - An uncovered level outdoor recreation space, normally masonry that is less than 12 inches above grade.

Pawnbroker - Any person, corporation, or other business entity engaged in the business of lending money on the deposit or pledge of tangible personal property or in the business of purchasing tangible personal property on the condition of reselling same to the seller at a stipulated price or reselling same to the general public upon the failure of the seller to reclaim the property. Without limiting the foregoing, any person, corporation, or other business entity required by the State or County, to have a pawnbroker or pawn dealer license or other similar license to operate a pawn shop or otherwise engage in pawning operations shall be deemed to be a pawnbroker under this definition.

Pennant - Any series of small flag-like or streamer-like pieces of cloth, plastic, paper, or similar material attached in a row to any staff, cord, building, or at only one (1) or two (2) edges, the remainder hanging loosely.

Permanent Sign – See "Sign, Permanent."

Permitted Use – See "Use, Permitted."

Person - An individual, association, firm, partnership, corporation, or government agency, but does not include the City.

Person with a Disability - A person who is determined by a qualified medical authority to have physical or mental impairments that:

1. Are expected to be long continued and of indefinite duration;

2. Substantially impede the ability to live independently; and

3. Are of such a nature that the ability to live independently could be improved by more suitable housing conditions.

Personal Living Quarters - A permanent residential unit with incomplete kitchen or bathroom facilities, occupied by no more than two (2) persons in each such unit, and located within a larger structure that contains at least five (5) such units, plus a residential unit for an on-site manager.

Personal Services Office - Offices directly serving the public, such as real estate office; travel agency; investment broker; insurance sales; and similar uses. Items separately regulated in this Chapter are not included in this definition.

Pet Grooming - A facility, other than a veterinary hospital, used for the grooming of household pets for profit, and not including overnight boarding.

Petitioner - See "Applicant."

Pipe Stem Lot – A lot that does not meet the required frontage at the normal minimum front setback line, due to being configured with a narrow panhandle or pipe stem, which panhandle or pipe stem provides vehicular and pedestrian access to a street, with the bulk of the property lying to the rear of one (1) or more lots.

Plan - The policies, statements, goals, and interrelated plans for private and public land use, transportation, and community facilities documented in texts and maps which constitute the guide for the City's future development. For the purposes of this definition, the word "Plan" shall include general plan, Master Plan, ~~comprehensive plan, community plan,~~ neighborhood plans, and the like as adopted in accordance with the applicable provisions of State law. "Plan" does not include the term "project plan" as defined elsewhere in this Article.

Plat - A plotted map, chart or plan; or a map of a legally recorded subdivision showing the boundaries and locations of the lot or lots recorded thereon.

1. *Plat, Ownership* - See "Ownership Plat."

2. *Plat, Final Record* - A map that illustrates a metes and bounds description of the property into a system of lot and block numbering, the naming of the tract (subdivision name), and the assignment of a plat number when recorded among the Land Records of Montgomery County, Maryland.

~~3.*Plat, Subdivision* (Final Record Plat) - Final record plats are the illustrated system of mapping and identifying lots within densely populated areas into a single mapping system.~~

Porch - A roofed, open area attached to or part of a building, and with direct access to and from the building.

Pre-Existing Grade – The height of the ground prior to construction or earth moving by human means as of [insert effective date].

Preliminary Report - An initial report prepared by the Planning Commission providing recommendations on appropriate zoning classifications for properties being annexed into the City.

Private Club - An incorporated or unincorporated association for civic, social, cultural, religious, literary, political, recreational, or like activities, operated for the benefits of its members and not open to the general public.

~~*Professional Office* - The office of a member of a recognized profession maintained for the conduct of that profession, but not including medical, veterinary, or dental clinics.~~

Prohibited Use – See "Use, Prohibited."

Project Plan - A conceptual plan of development for a major project proposal that must be approved by the Mayor and Council and may encompass multiple buildings or multiple uses, and which may include a phasing plan for completion of the development over time.

Public Use Space - An open area associated with and located on the same tract of land as a principal building or group of buildings providing light and air, recreational space, or other similar purpose. Such open area must be accessible for use and enjoyment by the general public, and may include space so located and treated as to enhance the amenity of the development by providing landscaping features, screening, or a general appearance of openness**.** Internal landscaping within a parking facility as required in Section 4.d of the Landscaping, Screening and Lighting Manual, does not constitute Public Use Space.

Public Utility Building - Buildings and structures of a public utility company for the housing of switching equipment, regulators, and stationary transformers for supplying electric service; telephone offices and exchanges; radio and television stations, and buildings and structures of similar nature and characteristics. The term public utility building does not include a wireless communication facility and its related equipment enclosures. This term does not include publicly-owned or publicly-operated facilities.

Qualifying Lot – See "Lot, Qualifying."

Real Estate Sign – See, "Sign, Real Estate."

Rear Lot Line – See "Lot Line, Rear."

Rear Yard – See "Yard, Rear."

Record Lot – See "Lot, Record."

Recreational Establishment, Indoor, Commercial - An activity of an athletic nature for which a fee is paid which takes place inside a building, including baseball batting in cages, basketball, golf driving practice, gymnastics, golf, racquetball, rock climbing, skiing practice, swimming, tennis, volleyball, bowling, billiards, or other athletic activity.

Recreational Establishment, Outdoor, Commercial – An activity of an athletic nature for which a fee is paid which takes place outside a building.

Recreational Facility - Any non-accessory swimming pool, community building, golf course, tennis court, baseball diamond, football field, basketball court, play area, handball court, or other athletic field or facility.

Renewable Energy Generation Equipment – Any equipment necessary for the onsite generation and use of energy from renewable energy sources including but not limited to solar, wind and geothermal.

Restaurant - A dine-in establishment with seating for patrons that merchandises or dispenses food and drink.

1. *Restaurant, Accessory* - A restaurant that is an accessory use to a hotel or office building and intended primarily to serve those guests or workers already on site, and does not include drive-through or walk-up services, a separate outside entrance, or signage visible from a public way;

2. *Restaurant, Fast Food* - An establishment in which food and drink are usually prepared in advance and served in disposable containers and which may be consumed on premises or may be taken from the premises. Such establishment may or may not have drive-through facilities or may be a drive-through only restaurant with no indoor enclosed seating.

3. *Restaurant, Full Service* - An establishment merchandising or dispensing food and drink which may include curb side pick-up but not a drive-through facility, and whose principal method of operation includes one (1) or more of the following characteristics:

   (a) Customers, normally provided with an individual menu, are served their food by a restaurant employee at the same table or counter at which said items are consumed and/or
   (b) A cafeteria or buffet style operation where food or drink is generally consumed within the restaurant building.

Retail - The sale of commodities or goods ~~in small quantities~~ to the end consumer.

Right-of-way, public – That area along which the public has a right to pass or travel, which area was originally intended for development as a raod, street, or highway, with or without related sidewalks or other appurtenances, and was accepted on behalf of the public by plat, easement, eminent domain, purchase, fee simple title, or prescriptive use.

Sale, Wholesale - The sale of goods, wares, and merchandise to other than the ultimate consumer or user for the purpose of resale.

Self-Storage Warehouse – See "Warehouse, Self-Storage."

Semidetached Dwelling – See "Dwelling, Semidetached (Duplex)."

Senior Adult - A person who is 62 years of age or older.

Service Industrial Use - Light industrial, research, and service uses not normally requiring the use of heavy machinery or noxious materials. Such uses include, but are not limited to, the packaging of previously prepared commodities; assembly of electrical and electronic appliances and equipment and precision instruments; photographic processing; self-storage warehouse; radio and television recording studios; research laboratories; home improvement services; and similar types of uses. Items separately regulated in this Chapter are not included in this Chapter.

Setback - The minimum perpendicular distance required between a lot line and any building or structure constructed or which may be constructed thereon consistent with the setback requirements of the zone in which such lot is located.

Sexually Oriented Activity - Any of the following:

1. The fondling or other erotic touching in a sexual context of human or animal genitals, pubic region, buttocks, or female breast;

2. Sex acts, heterosexual or homosexual, actual or simulated, including but not limited to oral, anal, or vaginal intercourse, sodomy, masturbation, and masochistic or sadistic acts; or

3. Excretory functions of any nature as part of or in connection with any of the activities set forth above.

Sexually Oriented Material - Any material, display, or performance whether written, oral or visual, whose predominant character and theme is the depiction or description of sexually oriented activities or specified anatomical areas, as well as any instrument, device or paraphernalia, which is designed for use in connection with sexually oriented activities.

Shooting Gallery or Range - Any establishment which, as part of its activities, provides a location in which firearms are discharged.

Shopping Center - A group of six (6) or more commercial establishments on a single record lot which are planned, developed, and managed as a single unit with off-street parking provided on the property and related in location, size, and type of shops to the trade area that the unit serves.

Side Lot Line – See, "Lot Line, Side."

Side Yard – See "Yard, Side."

Sign - Any structure, part thereof, or device attached thereto or painted or represented thereon or any material or thing, illuminated or otherwise, which displays or includes any numeral, letter, words, model, banner, pennant, emblem, insignia, device, trademark, logo, graphic, or other representation, in any manner whatsoever, so as to convey information or attract attention. Sign does not include the flag, emblem, insignia, poster, or other display of a nation, state, or political subdivision.

1. *Abandoned Sign* - A sign which identifies a business, lessor, service, owner, product, or activity that is no longer located on the premises, or a sign for which no legal owner can be found. "Abandoned sign" also includes any permanent sign not properly maintained or operated for a period of six (6) months or longer, any temporary sign that has deteriorated, and any sign structure that no longer supports the sign for which it was designed. Permanent signs applicable to a business temporarily suspended because of a change of ownership or management of such business shall not be deemed abandoned unless the property, building, or space remains vacant for a period of six (6) months or more.

2. *Sign, Building* - Any sign mounted on a wall, window, marquee, fascia, mansard, canopy, or parapet of a building.

3. *Sign, Commercial* - A sign that references or directs the attention of the public to a business, commodity, service, sale or sales event, or other commercial activity. Commercial sign does not include election signs, temporary signs pertaining to fundraising activities for non-profit organizations, or temporary yard sale signs.

4. *Sign, Directional* - A noncommercial sign that contains only information assisting the flow of vehicular or pedestrian traffic or control of parking.

5. *Sign, Election* - Any temporary sign that advocates the candidacy of any person for an elected position or an issue that is to be voted on in a Federal, State, County, or City election process. Election sign does not include a campaign headquarters sign or other permanent sign.

6. *Sign, Freestanding* - Any sign which carries only the name and/or logo or trademark of one (1) business, place, organization, building, or person it identifies.

7. *Sign, Monument* - A freestanding sign mounted directly and permanently to the ground without a separate supporting structure.

8. *Sign, Noncommercial* - A sign that is not a commercial sign.

9. *Sign, Nonconforming* - Any sign that does not conform to the provisions of this Chapter, but was placed or constructed in accordance with City ordinances existing at the time of its placement or construction.

10. *Sign, Occupant Identification* - A sign indicating the name and/or profession or address of a person or persons or entity residing on the premises or legally occupying the premises.

11. *Sign, Off-Premises* - A sign that directs attention to a building, product, business, organization, service, entertainment, commodity, accommodations, activity, or institution that is not located, conducted, sold, rented, produced, manufactured and/or furnished on the same lot as the sign.

    (a) Off-premises signs include, but are not limited to, signs commonly referred to as "billboards."

    (b) Off-premises sign does not include election signs or noncommercial signs that comply with all other requirements of this Chapter.

12. *Sign, Permanent* - A sign that is constructed in a manner and of materials that will withstand long-term display and is intended to be displayed for an indefinite period of time.

13. *Sign, Real Estate* - A temporary sign advertising the sale, rental, or lease of the real estate upon which the sign is located.

14. *Sign, Temporary* - A non-permanent sign constructed of durable, semi-durable, or non-durable material not intended to be displayed for an indefinite period.

15. *Sign, Traffic Control* - Any sign located on public or private property that is used as a traffic control device and that is described and identified in the Manual on Uniform Traffic Control Devices (MUTCD) and approved by the Federal Highway Administrator as the national standard. A traffic control sign includes those signs that are classified and defined by their function as

regulatory signs (that give notice of traffic laws or regulations), warning signs (that give notice of a situation that might not readily be apparent), and guide signs (that show route designations, directions, distances, services, points of interest, and other geographical, recreational, or cultural information.).

16. *Sign, Yard Sale* - Any onsite temporary sign pertaining to the sale of personal property in, at, or upon any residential property or residentially-zoned property, whether such sale be designated as a yard sale, garage sale, lawn sale, home sale, attic sale, moving sale, rummage sale, or any similar designation.

Single Housekeeping Group – The functional equivalent of a traditional family; whose members are a non-transient interactive group of persons jointly occupying a single dwelling unit, including the joint use of common areas, and sharing household activities and responsibilities such as meals, chores, and expenses.

Single Unit Detached Dwelling – See "Dwelling, Single Unit Detached."

Site - A lot, tract, or parcel of land considered as one (1) land unit for the purposes of this Chapter.

Site Plan - The development plan for one (1) or more lots on which is shown the existing and proposed conditions of the lot, including topography, vegetation, drainage, floodplains, wetlands, and waterways; landscaping and open spaces; walkways; vehicle circulation, parking and loading areas; historic and archaeological resources; utility services; structures and buildings; signs; exterior lighting; buffers and screening; surrounding development; and any other information that reasonably may be required by the Approving Authority.

Special Exception - A grant of a specific use that would not be appropriate generally or without restriction and must be based upon a finding that certain conditions governing special exceptions as detailed in this Chapter exist, that the use conforms to the Plan, and that the use is compatible with the existing neighborhood.

Specified Anatomical Area - Any of the following:

1. Less than completely and opaquely covered human genitals, pubic region, buttocks, anus, or female breasts below a point immediately above the top of the areola; or

2. Human male genitals in a discernable turgid state, even if completely and opaquely covered.

Sport Facility, Multi-Purpose, Indoor, Commercial – A multi-purpose indoor facility that does not permit sale or consumption of alcoholic beverages on the premises, and

provides for recreational facilities including, but not limited to, the following activities: ice hockey, figure skating, recreational ice skating, indoor soccer, in-line skating, and health and fitness activities, excluding shooting galleries or ranges, conducted in a building containing not less than 60,000 square feet of gross floor area. Such a facility may also contain meeting rooms.

Story - A story is:

1. That portion of a building included between the surface of any floor and the surface of the floor next above it or, if there be no floor above it, the space between such floor and ceiling next above it.

2. A basement will be counted as a story if its ceiling is over five feet (5') above the level from which the height of the building is measured or if it is used for dwelling purposes. ~~by other than a janitor or domestic servant employed in the same building including the family of the same~~.

3. A mezzanine floor will be counted as a story if it covers over one-third (1/3) of the area of the floor next below it or if the vertical distance between the floor next below it and the floor next above it is 20 feet or more.

Story, Half - A story under a gable, hip, or gambrel roof, the wall plates of which on the least two (2) opposite exterior walls are not more than two feet (2') above the floor of such story.

Stream Buffer – The land area extending out from either side of a stream channel or wetland that protects the stream channel integrity and filters pollutants from reaching the stream itself. The width of a specific stream or wetlnd buffer is determined by the criteria set out in pages 13-17 of the Rockville *Environmental Guidelines for the Protection and Enhancement of the City's Natural Resources*, July 1999, hereby incorporated by reference.

Street - A public dedicated way which affords the principal means of access to abutting property, including street, avenue, place, drive, boulevard, highway, road, pike, cul-de-sac, court, and any other public way except an alley or driveway.

Street, Centerline of - A line:

1. Established as a centerline of a street by any State, County, or other official agency or governing body having jurisdiction thereof and shown as such on an officially adopted or legally recorded map; or

2. If there be no official center line of a street, the center line shall be a line lying midway between the street or right-of-way lines thereof. When the street lines

are indeterminate, and pavement or a well-defined traveled way exists, the centerline is assumed to be a line midway between the edges of such pavement or traveled way.

Street Width - The horizontal distance ~~between the side lines of a street at right angles to the side lines~~at right angles between the faces of the curbs or, where no curb is present, from the edges of the pavement.

Structural Alteration – See "Alteration, Structural."

Structure - A combination of materials which requires permanent location on the ground or attachment to something having permanent location on the ground.

Subdivider - Any person or duly authorized agent who undertakes the subdivision of land as defined herein and includes the term "developer" even though the personnel involved in the successive stages of the project may vary.

Subdivision - The division of a lot, tract, or parcel of land into two (2) or more lots, plats, sites, or other divisions of land or assemblage of land for the purpose, whether immediate or future, of sale or of building development. "Subdivision" includes resubdivision and, when appropriate to the context, relates to the process of resubdividing. ~~or to~~ Subdivision may also refer to the land or territory subdivided.

Subdivision, Minor - A division of a lot, tract, or parcel of land into no more than three (3) lots fronting on an existing road, not involving any new road or the extension of municipal facilities and not adversely affecting the development of the remainder of the parcel or adjoining property and not in conflict with a provision or portion of the Plan or this Chapter.~~,~~

Swimming Pool - A pool for swimming by human beings having adequate legal capacity and deck size.

1. *Swimming Pool, Accessory* - Swimming pools or wading pool, including buildings necessary or incidental thereto, conducted as an accessory use:

   (a) Maintained and operated by the management of any multiple-dwelling unit, attached development in any Residential Medium Density or Mixed-Use zone or development. An accessory swimming pool may provide memberships to persons residing in single-family dwellings if the pool was originally approved under a special exception for a private, non-commercial community swimming pool for use by residents in a development containing both single-dwelling unit and multiple-dwelling unit residences;

(b) Maintained and operated by the management of a hotel or motel for the use of patrons thereof; Maintained and operated by any industry for exclusive use of employees of such industry;

(c) Maintained and operated in conjunction with a bona fide country club located on a site having at least 50 acres for exclusive use of members of such club and their guest(s); or

(d) Owned and maintained by an individual or group of less than five (5) individuals or families for the sole use of the owner and guests of the owner, without charge for admission, and not for the purpose of profit or in connection with any business operated for profit, located on a lot as an accessory use to a residence.

2. *Swimming Pool, Non-accessory* - Any swimming pool that is not an accessory swimming pool.

Tangible Personal Property - Property having physical substance that is movable and not fixed permanently to one (1) location. Examples of tangible personal property include, but not limited to:

1. Art objects;
2. Audio-visual equipment, including a radio, television set, video disk machine, video cassette recorder, or stereo equipment;
3. Bicycles;
4. Cameras;
5. Carpets or rugs;
6. Computer equipment or typewriters;
7. Fine or historic china, crystal, glass, and porcelain;
8. Firearms;
9. Fur and leather goods;
10. Household appliances;
11. Jewelry or watches;

12. Musical instruments;

13. Office machines or equipment (except furniture of similar furnishings);

14. Optical equipment;

15. Tangible personal property pledged as collateral (pawned items);

16. Tools; and

17. Any item serialized, marked for personal identification purposes, or engraved.

Through Lot – See "Lot, Through."

Town Center Performance District – That area delineated as the Town Center Performance District on the zoning map.

Townhouse - See dwelling unit, townhouse.

Tract - An area of land with definite or ascertainable boundaries and which may include multiple lots or parcels.

Traffic Control Sign – See "Sign, Traffic Control."

Trailer - An unpowered wheeled vehicle designed to be towed by a motor vehicle.

Transit Station Link - An exterior pedestrian walkway, accessible for public use and separate and apart from vehicular traffic that provides a direct connection to a Metrorail station.

Twinbrook Performance District That area delineated as the Twinbrook Performance District on the zoning map.

Urban - Within the City, those areas characterized by a concentration of commercial and multi-unit residential uses with building heights averaging more than 40 feet tall and representing the highest development densities within the City.

Use - The ~~principal~~ purpose for which a lot or portion thereof or the building or structure thereon or part thereof is designed, arranged, or intended and for which it is or may be used, occupied or maintained.

~~1.~~1. *Use, Accessory* -

A use incidental to a permitted, conditional, or special exception use which complies with the conditions for an accessory use in Article 9 of this Chapter.

2. *Use, Conditional* - A use that is permitted in a zone, but which must comply with specified conditions that may limit some aspect of that use.

3. *Use, Nonconforming* - See "nonconforming use".

4. *Use, Permitted* - A use of land permitted by right anywhere within the zone.

5. *Use, Prohibited* - A use of land or building not permitted anywhere within the zone, either by right or by special exception.

6. *Use, Special Exception* - See "special exception".

Variance - A modification only of density, bulk, or area requirements in the zoning ordinance where such modification will not be contrary to the public interest and where owing to conditions peculiar to the property, and not the result of any action taken by the applicant, a literal enforcement of this Chapter would result in practical difficulty.

Veterinary Office - A facility staffed by at least one (1) veterinarian duly licensed by the State for the care of animals and their treatment on an outpatient basis only.

Visible Construction - The initiation of laying and/or installing material for a future structure. Visible construction requires more than locating markers and site grading.

Visit - A trip to a residence by one (1) vehicle transporting one (1) or more clients or customers or one (1) vehicle picking up or delivering parcels in connection with a home-based business enterprise.

Warehouse, Self-Storage - A building consisting of individual storage spaces available for rent or lease to individual persons. A resident care-taker dwelling unit may be allowed as an accessory use.

Warehousing - The storage of goods, wares, and merchandise which will be processed, sold, transferred, or otherwise disposed of for ultimate consumption off the premises.

Wearing Apparel Service - Services such as tailor or dressmaker; dry cleaning pick-up station; shoe repair; laundromat; and valet. Items separately regulated in this Chapter are not included in this definition.

Wireless Communication Facility - A facility for the transmission and/or reception of wireless communication services, consisting of one (1) or more antennas. Such a facility also may include transmission cables, related equipment enclosures, and, in some cases, a freestanding ground-mounted antenna support structure to achieve the necessary elevation.

Wireless Communication Service - Those services defined in the same manner as in Title 47, U.S. Code, Section 332(c)(7)(c), as they may be amended from time to time, and such other services that consist of the transmission and/or reception of information by electromagnetic wave, digital signals, broadcast television signals, analog signals, radio frequencies, or other communication signals.

Yard - The undeveloped space created by the setback requirements, lying between the lot lines and any structure or building, and not occupied nor obstructed from the ground upward, except as provided in this Chapter.

1. *Yard, Front* - Open space extending across the full width of lot between the front lot line or the proposed front street line and nearest line of the building or any enclosed portion thereof. The depth of such yard is the shortest horizontal distance between the front lot line and the nearest point of the building. For a corner lot in a residential zone defined by two (2) street lines connected by a third line having a length of less than 50 feet (commonly known as a "truncation"), the front yard must be measured from the front lot line, not from the truncation line.

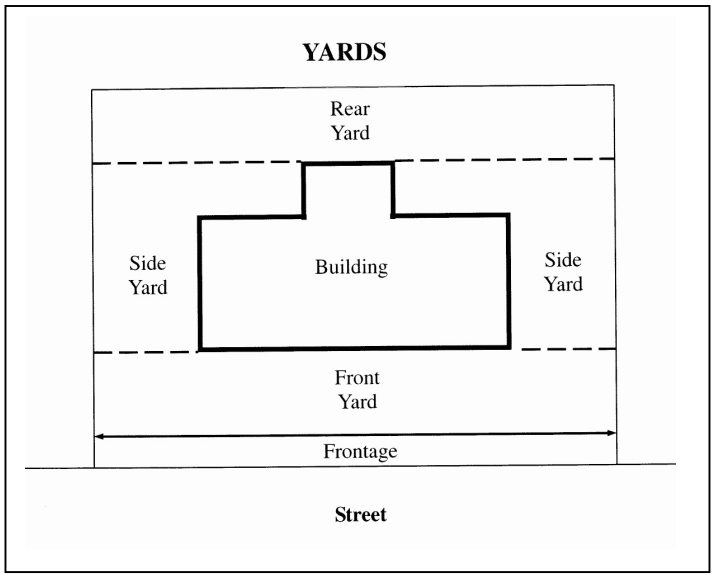

2. *Yard, Rear* - The open space extending across the full width of the lot between the rear line of the lot and the nearest line of the building, porch, or projection thereof. The depth of such yard is the shortest horizontal distance between

the rear lot line and the nearest point of the building. When the rear lot line is less than ten feet (10') long or, if the lot comes to a point in the rear, the depth of rear yard is measured to an assumed rear lot line, as defined under lot line, rear.

3. *Yard, Side* - The open space between the side lot line, the side street line, or the proposed side street line, if such line falls within the lot, and the nearest line of the building, porch, or projection thereof, extending from the front yard to the rear yard, or, in the absence of either of such yards, to the front lot line or rear lot line. The width of a side yard shall be the shortest distance between the side lot line and the nearest point of the building, porch, or projection thereof.

Yard Sale - The occasional sale or offering for sale to the general public of items of personal property by the owner or tenant of an improved lot in a residential ~~district,~~ zone whether such sale is designated as a yard sale, garage sale, lawn sale, home sale, attic sale, moving sale, rummage sale, or similar designation.

Zone - An established zoning district within which certain uses of land and buildings are permitted with or without conditions and certain others are permitted only by special exception or are prohibited; yards and other opens spaces are required; lot areas, building height limits, and other requirements are established.

Zoning Map - The Zoning Map of the City of Rockville, Maryland, officially adopted by the Mayor and Council, together with all amendments thereto subsequently adopted.

25.03.03 – Terms of Measurement and Calculation

a. *Rules of Measurement* - All measured distances are to be measured to the nearest integral foot. Measurements up to 0.49 feet are rounded down; measurements of 0.5 feet or more are rounded up.

b. *Calculations* - The following subsections provide methods for calculating various areas and densities.

1. *Rounding* - Measurements or other numbers are not rounded up in order to meet a minimum requirement or rounded down in order to meet a maximum requirement.

2. *Computation of Time* - In computing the time limits specified in this Chapter:

(a) The day of the act, event, or default after which the designated period of time begins to run is not included.

(b) Unless business days are specified, if the period of time allowed is more than seven (7) days, all calendar days are counted. If the period of time allowed is equal to or less than seven (7) days, intermediate Saturdays, Sundays, and holidays are not counted. The final day is counted unless it is a Saturday, Sunday, holiday, or other day on which City Hall is not open for regular business; in which case, the next day on which City Hall is open for regular business will count as the last day.

c. *Terms of Measurement* – For purposes of this Chapter, the following terms have the following meanings

1. *Acre* - A land area containing 43,560 square feet.

2. *Fenestration* - Openings in the building wall allowing light and views between the interior and exterior. Fenestration is measured as the glass area (excluding mountings and similar window frame elements with a dimension greater than one inch (1")) for conditioned space and as open area for parking structures or other unconditioned, enclosed space.

~~3.*Floor Area Ratio* (FAR) - The ratio of the gross floor area of all buildings on a lot to the lot area, excluding any portion of a building devoted to off-street parking.~~

3~~4~~. *Height (of a building)*

~~(c)~~(a) *Generally* - Except as otherwise provided, the height of a building is measured from the level of the approved street grade opposite the middle of the front of the building. The height is measured to:

(i) The highest point of roof surface of a flat roof;

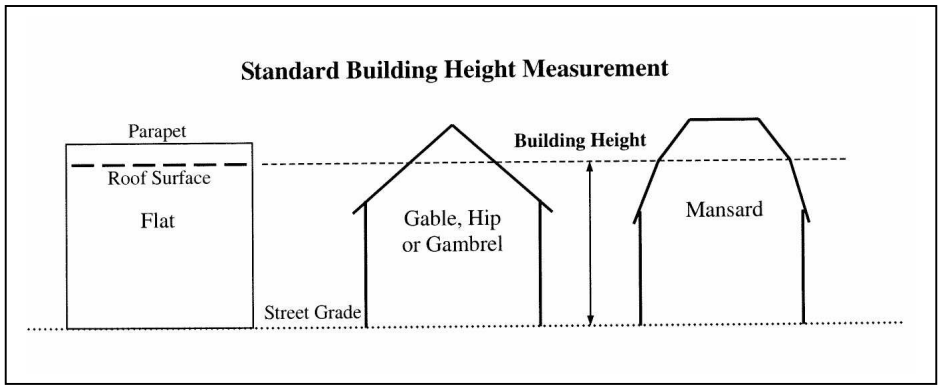

(ii) The deck line of a mansard roof; or

(iii) The mean height level between the eaves and ridge or peak of a gable, hip, or gambrel roof, except as set forth in subsection 25.10.08.c.

(b) *Exceptions*:

(i) *Greater Than 35' Setback* - If a building is set back 35 feet or more from the street line, the building height is measured from the average elevation of the finished grade along the front of the building.

(ii) *Corner Lot Exceeding 20,000 Square Feet* - On a corner lot exceeding 20,000 square feet of area, the height of a building may be measured from either adjoining street grade.

(iii) *Terraces above Street Grade* - If the building is located on a terrace above the street grade, the height is measured from the top of the terrace.

(iv) *Through Lots* - For a through lot, the height may be measured from either street grade, provided that the maximum height permitted on the higher street extends to a point 150 feet from the lower street line, at which point the maximum height must be measured from the lower street.

(v) *Special Provision For Lots in the R-60, R-75, and R-90 Zones* - See Section 25.10.08.c.

4.~~5.~~ *Impervious Surface, Maximum* - The allowable sum of all structures or surfaces that create an impervious covering of the ground area. This includes buildings, driveways, decks, patios, air conditioner pads, and similar items. Internal sidewalks up to four feet (4') wide, play equipment, and other decorative structures are not included.

5~~6~~. *Lot Area*

(a) *Lot Area, Minimum* - That minimum net lot area required in each zone ~~to accommodate all required setbacks, yards, and open areas.~~

.

(b) *Lot Area, Net* - The horizontal area included within the rear, side, and front lot or proposed street lines of the lot, excluding any street or highway, whether dedicated or not dedicated to public use, but including off-street automobile parking areas and other accessory uses.

(i) No yard or open area provided around any building for the purpose of complying with the provisions of this Chapter can be considered as a yard or open area for any other building.

(ii) Any lot as defined in this Chapter, which was legally recorded prior to October 1, 1957, and which was a buildable lot under the zoning ordinance in effect prior to that date, is deemed a buildable lot even though it may have less than the minimum area required for any ~~detached residential low density~~ Single Dwelling Unit Residential Zone.

(iii) As to any lot deemed buildable, in the event that such lot is narrower than the minimum width required in the zone in which such lot is located, the side yard requirements as to such lot can be reduced to those in effect in the next higher density detached residential zone.

~~(c)~~(c) *Lot Area, Useable* - The useable area upon which the density of development is calculated must be determined by deducting from the gross area of the tract the following:

(i) All land indicated in the Plan for highways with a designated right-of-way width of 100 feet or greater;

(ii) All one-hundred year flood plains.

~~7~~6. *Lot, Minimum Width at Front Lot Line* - The least permissible width of a lot, measured horizontally along the front lot line.

7~~8~~. *Parking Spaces*

(a) *Number of Employees* - For the purposes of this Article, the number of employees for a use must be computed on the basis of the maximum number of persons to be employed at any one (1) time other than at changes of shifts.

(b) *Wheel Bumper and Curbs* - For purposes of computing the area of any public parking space, a parking space may extend beyond a wheel bumper or curb provided that:

(i) The computed area of such parking space does not extend beyond a wheel bumper or curb more than two feet (2') as measured along the side of the space which extends the greatest distance beyond the wheel bumper or curb; and

(ii) The computed area of such parking space does not extend beyond a wheel bumper or curb which is more than six inches (6”) high, and the area of overhang is free of all obstructions above curb height.

8~~9~~. *Sign Area and Height* - See Section 25.18.07.

9~~10~~. *Swimming Pool, Legal Capacity* – The sum of the following:

(a) One (1) person for each ten (10) square feet of water surface where the water depth is less than five feet (5’); and

(b) One (1) person for each 24 square feet of water surface where the water depth is five feet (5’) or greater, excluding 300 square feet of such water surface which shall be required for each diving board or diving platform.

1~~1~~0.*Swimming Pool, Minimum Deck Size Legal Capacity* – Twenty (20) square feet per person, exclusive of the pool property, of pool apron, deck or other structure surrounding the pool proper multiplied by the number of persons constituting the legal capacity of the pool.

25.03.04 – Chart of Symbols

The following symbols are used throughout this Chapter.

Symbol	Term
’	Foot / Feet
”	Inches
Ø	Square Feet

Article 4 – Approving Authorities

25.04.01 – Mayor and Council

a. *Powers and Duties* – The Mayor and Council have all powers and duties conferred and imposed on it by ~~this Chapter, Article 2, Section 1 of~~ the City Charter, Article 66B of the Annotated Code of Maryland, this Chapter and other applicable provisions of State law.

~~b. *Expiration of Mayor and Council's Decisions on Project Plan Approvals*~~

~~1.Unless otherwise provided in the approval, a decision of the Mayor and Council on an application for project plan approval expires: if a site plan application implementing all or a portion of a project plan is not filed within six (6) months of the date of the Mayor and Council's approval.~~

~~2.The Mayor and Council may, for good cause shown, grant no more than two (2) extensions, not to exceed six (6) months each, of the initial implementation period set forth in subsection b.1.(a) subject to the provisions for an extension contained in Section 25.05.08, "Extension of Implementation Period".~~

~~3. Unless an alternative phasing project schedule is established by the Mayor and Council in the project plan approval, all phases of a multi-phase project for which a project plan approval has been granted must be commenced within eight (8) years from the date of the approval letter of the Mayor and Council or the project plan approval will expire. A project plan approval will become void for those buildings within a multiple building development for which site plan approval has not been obtained and construction has not commenced within eight (8) years from the date of the project plan approval letter.~~

b~~c~~. *Appeals* – Any person aggrieved by any decision of the Mayor and Council made on a map amendment application or a project plan application may appeal the same to the Circuit Court for the County. Such appeal must be taken according to the Maryland Rules as set forth in Title 7, Chapter 200.

25.04.02 – Planning Commission

a. *Established* – There is established a Planning Commission for the City of Rockville.

b. *Powers and Duties*

1. *Generally* – The Commission has all those powers and duties conferred and imposed upon it by this Chapter and the provisions of State law, including but not limited to:

   (a) Providing analysis and recommendations to the Mayor and Council on matters related to the Plan for the City;

   (b) Providing analysis and recommendations to the Mayor and Council on matters related to amendments to this Chapter and the zoning map;

   (c) Reviewing and acting upon site plan and project plan applications in accordance with provisions of Article 7;

   (d) Administering the subdivision process as set forth in Article 21; and

   (e) Providing analysis and advice to the Board of Appeals regarding ~~variances,~~ special exceptions, and other matters when deemed appropriate by the Planning Commission. If the Planning Commission exercises this power, the Planning Commission must file its written recommendation on the matter, provided such recommendation is placed in the application file at least seven (7) days prior to the public hearing or meeting of the Board of Appeals.

2. *Responsibility Where Approval is Required* – Where Planning Commission approval is required under this Chapter or other applicable law, the Commission must:

   (a) Consider and act upon any request for approval,

   (b) Consider such request with regard to matters and facts pertinent and applicable thereto, and

   (c) Render its decision in accordance with the requirements, purpose, and intent of this Chapter.

c. *Membership*

1. *Number* – The Commission consists of seven (7) members who are appointed by the Mayor, subject to the confirmation of the Council.

2. *Term*

(a) *Length of Term* – The term of each member is five (5) years, or until a successor takes office. Appointment to fill an unexpired term is for the remaining length of the initial term.

(b) *Staggered Terms* – The respective terms of the seven (7) members must be staggered.

3. *Chairperson*

(a) *Appointment* – A Chair is elected by and from the appointed members of the Commission.

(b) *Term* – The Chair serves a term of one (1) year and is eligible for reelection.

4. *Qualification* – Each member must be a resident of the City.

5. *Clerk of Commission* – The Chief of Planning serves as the Clerk of the Commission and will:

(a) Attend all meetings of the Commission;

(b) Keep a full and accurate account of the proceedings of the Commission, including but not limited to the official record of all matters filed with the Commission;

(c) Accept and transmit all relevant applications to the Commission; and

(d) Keep such other records and perform such other duties as may be required by this Chapter or by the Commission.

d. *Rules of Procedure* – In exercising its powers and complying with its duties hereunder, the Commission must adopt reasonable rules for the conduct of its business.

e. *Meetings and Hearings*

1. Meetings must be held when necessary to conduct business or at intervals as may be mandated by State law, this Chapter, or the adopted Rules of Procedure of the Commission.

2. Hearings must be held when required by State law or other provision of this Chapter.

~~f. *Expiration of Commission's Site Plan Approval*~~

~~1. *Final Site Plan Approval* - A final site plan approval by the Planning Commission expires if construction does not commence pursuant to a validly issued building permit within two (2) years of the Planning Commission approval, unless another time frame is provided by this Chapter or by the terms of the approval.~~

~~2. *Extensions* - The Commission may, for good cause shown, grant no more than two (2) extensions of not more than six (6) months each for any prior approval subject to the provisions of Section 25.05.08, "Extension of Implementation Period". The Planning Commission may require as a condition of approval of an extension that the applicant submit six (6) months progress reports to the Chief of Planning detailing efforts undertaken to implement the site plan approval.~~

~~3. *Multi-Phase or Multi-Building Site Plan Approval* - All phases of a multi-phase project for which a site plan approval has been approved must be commenced within eight (8) years from the date of the approval letter of the Planning Commission or the site plan approval will expire. A site plan approval will become void for those buildings within a multiple building development for which construction has not commenced within eight (8) years from the date of the site plan approval letter.~~

~~2.~~*f.* *Appeals* – Unless otherwise provided, any person aggrieved by any final decision of the Commission may appeal the same to the Circuit Court for the County. Such appeal must be taken according to the Maryland Rules as set forth in Title 7, Chapter 200.

25.04.03 – Board of Appeals

a. *Established* – There is established a Board of Appeals for the City of Rockville.

b. *Powers and Duties*

1. *Generally* – The Board has all those powers and duties conferred and imposed upon it by this Chapter and the provisions of State law, including but not limited to:

(a) Reviewing and acting upon applications for special exceptions and variances;

(b) Reviewing and acting upon appeals from administrative decisions; and

(c) Reviewing and acting upon appeals from a decision of the Sign Review Board.

2. *Responsibility Where Approval Is Required* – Where Board of Appeals approval is required under this Chapter or other applicable law, the Board must:

(a) Consider and act upon any request for approval;

(b) Consider such request with regard to matters and facts pertinent and applicable thereto; and

(c) Render its decision in accordance with the requirements, purpose, and intent of this Chapter.

3. *Administrati~~ion~~ve Appeals* – All appeals from administrative decisions, including appeals from the Sign Review Board, are de novo and shall be considered by the Board in accordance with State law.

c. *Membership*

1. *Number* – The Board consists of three (3) members and one (1) alternate member who are appointed by the Mayor, subject to the confirmation of the Council.

2. *Term*

(a) *Length of Term* – The term of each member is three (3) years, or until a successor takes office. Appointment to fill an unexpired term is the remaining length of the initial term.

(b) *Staggered Terms* – The respective terms of the three (3) members and one (1) alternate member must be staggered.

3. *Chairperson*

(a) *Appointment* – A Chair is elected by and from the appointed members of the Board.

(b) *Term* – The Chair serves a term of one (1) year and is eligible for reelection.

4. *Qualification* – Each member must be a resident of the City.

5. *Clerk of the Board* – The Chief of Planning serves as the Clerk of the Board and will:

   (a) Attend all meetings of the Board;

   (b) Keep a full and accurate account of the proceedings of the Board, including but not limited to the official record of all matters filed with the Board;

   (c) Accept and transmit all relevant applications to the Board; and

   (d) Keep such other records and perform such other duties as may be required by this Chapter or by the Board.

d. *Rules of Procedure* – In exercising its powers and complying with its duties hereunder, the Board must adopt reasonable rules for the conduct of its business.

e. *Meetings and Hearings*

   1. Meetings must be held when necessary to conduct business or at intervals as may be mandated by State law, this Chapter, or the adopted Rules of Procedure of the Board.

   2. Hearings must be held when required by State law or other provision of this Chapter.

   3. The Board must hold a hearing on an appeal from the decision of the Sign Review Board no later than 45 days from the date of the filing of the appeal, provided that a different date may be set with the consent of the party filing the appeal.

f. *Decision on Appeal from Sign Review Board* – The Board shall render its decision on an appeal from the Sign Review Board within ten (10) business days following the completion of the hearing, provided that the time for rendering a decision may be extended with the consent of the party filing appeal.

~~g. *Expiration of Board's Approval of Special Exceptions and Variances*~~

   ~~1. *Expiration Periods* - A decision of the Board of Appeals granting a special exception or a variance expires under the following circumstances:~~

      ~~(a) *Site Plan Approval Required* - If site plan approval is required to exercise the rights granted by the Board's decision, application for such approval must be filed within six (6) months of the date of the Board's decision, or~~

~~the approval shall expire. The filing of an application for site plan approval shall extend the rights granted by the Board's decision to a date one (1) year from the date of the Board's decision. The approval of a site plan shall extend the rights granted by the Board's decision for the same period of time that the rights granted by the site plan approval exist, including any extensions thereof;~~

~~(b) *Building Permit Required* - If a building permit is required to exercise the rights granted by the Board's decision, such building permit must be issued and construction started within 12 months of the date of the board's decision, or within the time limit as extended by the approval of a site plan, or the approval shall expire; and~~

~~(c) *No Building Permit Required* - If a building permit is not required to exercise the rights granted by the Board's decision, such rights must be established within 12 months of the Board's decision, or the approval shall expire.~~

~~2. *Extension* - The Board may, for good cause shown, grant no more than two (2) extensions of not more than six (6) months each for any prior grant of a special exception or variance subject to the provisions for an extension of Section 25.05.08, "Extension of Implementation Period".~~

~~h~~g. *Appeals* – Any person aggrieved by any final decision of the Board, including the failure of the Board to conduct a hearing or render a written decision within the time frames set forth in Subsections 25.04.03.e.3 and f of this Section, may appeal the same to the Circuit Court for the County. Such appeal must be taken according to the Maryland Rules as set forth in Title 7, Chapter 200.

25.04.04 - Historic District Commission

a. *Established* – There is established an Historic District Commission for the City of Rockville.

b. *Powers and Duties*

1. *Generally* – The Historic District Commission has all those powers and duties conferred and imposed upon it by this Chapter and the provisions of State law, including but not limited to:

(a) Identifying and recommending to the Mayor and Council properties and/or areas deemed eligible for historic designation due to their historic, archaeological, or architectural significance;

(b) Reviewing applications for ~~the construction, exterior alteration, reconstruction, movement or demolition of a site or structure located within a designated~~ Certificates of Approval for sites, buildings or structures within a ~~historic~~ Historic District zone;

(c) ~~Providing courtesy review for projects adjacent to Historic Districts~~Evaluating for eligibility historic designation any sites, buildings or structures located outside a Historic District Zone which are proposed for demolition. ;

(d) ~~Providing preliminary assessment of potential historic, archaeological, or architectural significance through the Natural Resource Inventory (NRI) process for all site plan / development reviews;~~

~~(e)~~ Providing ~~analysis and advice (~~courtesy review ~~)~~ to the Planning Commission and Mayor and Council as requested, for projects with or adjacent to historic resources~~on site plans and project plans that involve properties identified as potentially significant through the NRI process~~; and

(e~~f~~) All other powers vested in the Historic District Commission by Article 66B of the Annotated Code of Maryland.

2. *Responsibility Where Approval Is Required* – Where Historic District Commission approval is required under this Chapter or other applicable law, the Historic District Commission must:

(a) Consider and act upon any request for approval;

(b) Consider such request with regard to matters and facts pertinent and applicable thereto; and

(c) Render its decision in accordance with the requirements, purpose, and intent of this Chapter.

c. *Membership*

1. *Number* – The Historic District Commission consists of five (5) members who are appointed by the Mayor, subject to the confirmation of the Council.

2. *Term*

(a) *Length of Term* – The term of each member is three (3) years, or until a successor takes office. Appointment to fill an unexpired term is the remaining length of the initial term.

(b) *Staggered Terms* – The respective terms of the five (5) members must be staggered.

3. *Chairperson*

(a) *Appointment* – A Chair is elected by and from the appointed members of the Historic District Commission.

(b) *Term* – The Chair serves a term of one (1) year and is eligible for reelection.

4. *Qualification*

(a) Each member must be a resident of the City; and

(b) Each member must possess a demonstrated special interest, specific knowledge or professional or academic training in such fields as: history, architecture, architectural history, planning, archaeology, anthropology, curation, conservation, landscape architecture, historic preservation, urban design, or related disciplines.

(i) The requirement for commission membership under the category of demonstrated special interest may be satisfied either by formal training in one (1) or more of the above-listed fields or two (2) or more years of active membership in a preservation-related organization as cited in a letter of recommendation from that organization.

(ii) Formal post secondary education, employment and/or practical experience in one (1) or more of the above-listed fields may satisfy the requirement for membership under the category of specific knowledge.

(iii) The requirement for commission membership under the category of professional or academic training may be satisfied by, at a minimum, two (2) years experience as a professional or a Bachelor's degree in one or more of the above listed fields.

(iv) A "related discipline" may be conservation of historic resources or a building trade or profession with a specialty in structural restoration.

5. *Clerk of the Historic District Commission* – The Chief of Planning serves as the Clerk of the Historic District Commission and will:

   (a) Attend all meetings of the Historic District Commission;

   (b) Keep a full and accurate account of the proceedings of the Historic District Commission, including but not limited to the official record of all matters filed with the Commission;

   (c) Accept and transmit all relevant applications to the Historic District Commission; and

   (d) Keep such other records and perform such other duties as may be required by this Chapter or by the Historic District Commission.

d. *Rules of Procedure* – In exercising its powers and complying with its duties hereunder, the Historic District Commission ~~may~~ must adopt reasonable rules for the conduct of their business.

e. *Meetings and Hearings*

   1. Meetings must be held when necessary to conduct business or at intervals as may be mandated by State law, this Chapter, or the adopted Rules of Procedure of the Historic District Commission.

   2. Hearings must be held when required by State law or other provision of this Chapter.

~~f. *Expiration of Historic District Commission's Approvals*~~

~~1.*Expiration Period* - A Certificate of Approval issued by the Historic District Commission expires under the following circumstances:~~

~~(a) *Site Plan Approval Required* - If site plan approval is required to exercise the Certificate of Approval, an application for site plan approval must be filed within six (6) months of the date of the Certificate of Approval or the Certificate of Approval expires. Filing an application for site plan approval extend the Certificate of Approval to a date one (1) year from the date of issuance of the Certificate. The approval of a site plan extends the Certificate of Approval for the same period of time that the rights granted by the site plan approval exist, including any extensions thereof; and~~

~~(b) *Building or Demolition Permit Required* - Any building permit or demolition permit required to implement a Certificate of Approval must be issued and construction or demolition started within 12 months of the date~~

~~of the Certificate of Approval, or within the time limit as extended by the approval of a site plan, or the Certificate of Approval expire.~~

~~2. *Extension* - The Historic District Commission may, for good cause shown, grant no more than two (2) extensions of not more than six (6) months each for any prior grant of approval subject to the provisions for an extension of Section 25.05.08, "Extension of Implementation Period".~~

f~~g~~. *Appeals* – Any person aggrieved by any decision of the Historic District Commission may appeal the same to the Circuit Court for the County. Such appeal must be taken according the Maryland Rules as set forth in Title 7, Chapter 200.

25.04.05 – Sign Review Board

a. *Established* – There is established a Sign Review Board of the City of Rockville.

b. *Powers and Duties*

1. *Generally* – The Sign Review Board has all those powers and duties conferred and imposed upon it by this Chapter and the provision of State law, including but not limited to:

(a) Hear and decide applications for sign permit review to determine if the proposed sign is in compliance with the requirements of this Chapter; and

(b) Hear and decide applications for modifications from the sign regulations contained in Article 18 of this Chapter, excluding prohibited signs.

2. *Responsibility where Approval is Required* – Where Sign Review Board approval is required under this Chapter or other applicable law, the Board must:

(a) Consider and act upon any request for approval;

(b) Consider such request with regard to matters and facts pertinent and applicable thereto; and

(c) Render its decision in accordance with the requirements, purpose, and intent of Article 18 and other applicable provisions of this Chapter.

c. *Membership*

1. *Number* – The Sign Review Board consists of three (3) members and (1) alternate who are appointed by the Mayor, subject to the confirmation of the Council.

2. *Term*

   (a) *Length of Term* – The term of each member is three (3) years, or until a successor takes office. Appointment to fill an unexpired term is the remaining length of the initial term.

   (b) *Staggered Terms* – The respective terms of the three (3) members must be staggered.

3. *Chairperson*

   (a) *Appointment* – A Chair is elected by and from the appointed members of the Sign Review Board.

   (b) *Term* – The Chair serves a term of one (1) year and is eligible for reelection.

4. *Qualification* – Each member must be a resident of the City.

5. *Clerk of Sign Review Board* – The Chief of Inspection Services serves as the Clerk of the Sign Review Board and will:

   (a) Attend all meetings of the Sign Review Board;

   (b) Keep a full and accurate account of the proceedings of the Sign Review Board, including but not limited to the official record of all matters filed with the Commission;

   (c) Accept and transmit all relevant applications to the Sign Review Board; and

   (d) Keep such other records and perform such other duties as may be required by this Chapter or by the Sign Review Board.

d. *Rules of Procedure* – In exercising its powers and complying with its duties hereunder, the Sign Review Board must adopt reasonable rules for the conduct of their business.

e. *Meetings and Hearings*

1. Meetings must be held when necessary to conduct business or at intervals as may be mandated by this Chapter or the adopted Rules of Procedure of the Sign Review Board.

2. A hearing must be held on a timely filed application at the Board's next scheduled meeting, provided that a different hearing date may be set with the consent of the party filing the application.

f. *Decision on Application from the Sign Review Board* – Decisions of the Board shall be made within ten (10) business days from completion of the hearing on the application.

g. ~~*Expiration of Sign Review Board's Approval*~~

~~1. *Installation of Sign* - A sign must be installed within six (6) months of the Sign Review Board's decision authorizing such sign, unless another time frame is provided within this Chapter or the decision of the Sign Review Board, or the approval shall expire. The filing of an application for site plan approval shall extend the approval of the Board to a date one (1) year from the date of the decision. The approval of a site plan shall extend the approval of the Board for the same period of time that the rights granted by the site plan approval exist, including any extensions thereof.~~

~~2. *Extension* - The Sign Review Board may, for good cause shown, grant no more than two (2) extensions of not more than six (6) months each for any prior grant of approval subject to the provisions for an extension of Section 25.05.08, "Extension of Implementation Period".~~

~~h.~~*Appeals* – Any decision by the Sign Review Board, or the failure of the Sign Review Board to act within the time frames set forth in Article 18 of this Chapter, may be appealed by any person aggrieved to the Board of Appeals within ten (10) business days after the decision is rendered.

25.04.06 – Chief of Planning

a. *Powers and Duties*

1. *Generally* – The Chief of Planning has all those powers and duties conferred and imposed upon the Chief of Planning by this Chapter including but not limited to:

(a) Acting as the clerk of various boards and commissions, where provided in this Article;

(b) Determining whether unclassified uses not specifically listed in the land use tables are either permitted or prohibited where the characteristics of the use are similar to other uses listed in the land use tables and consistent with the intent of this Chapter;

(c) Reviewing and acting upon administrative interpretations in accordance with Section 25.06.05;

(d) Reviewing and acting upon administrative adjustments in accordance with Section 25.06.06;

(e) Reviewing applications for building permits, occupancy permits and temporary occupancy permits for purposes of determining, and so advising the Chief of Inspection Services, whether all zoning requirements have been met; and

(f) Reviewing and acting upon site plan applications in accordance with the provisions of Article 7.

(g) Reviewing and acting upon non conforming alterations appreciation in accordance with the provisions of Section 25.08.07.

2. *Responsibility Where Approval Is Required* – Where Chief of Planning approval is required under this Chapter, the Chief of Planning must:

(a) Consider and act upon any request for approval;

(b) Consider such request with regard to matters and facts pertinent and applicable thereto; and

(c) Render a decision in accordance with the requirements, purpose and intent of this Chapter.

~~b. *Expiration of Chief of Planning's Site Plan Approval*~~

~~1. *Construction* - A final site plan approval by the Chief of Planning expires if construction does not commence pursuant to a validly issued building permit within two (2) years of the Chief of Planning's approval, unless another time frame is provided by this Chapter or by the terms of the approval.~~

~~2. *Extension* - The Chief of Planning may, for good cause shown, grant no more than two (2) extensions of not more than six (6) months each for any prior grant of approval subject to the provisions for an extension of Section 25.05.08, "Extension of~~

~~Implementation Period." The Chief of Planning may require as a condition of approval of an extension that the applicant submit periodic progress reports to the Chief of Planning detailing efforts undertaken to implement the site plan approval.~~

~~3. *Multi-Phase or Multi-Building Site Plan Approval* – All phases of a multi-phase project for which a site plan approval has been approved must be commenced within eight (8) years from the date of the approval letter of the Chief of Planning, the site plan approval will expire. A site plan approval will become void for those buildings within a multiple building development for which construction has not commenced within eight (8) years from the date of the site plan approval letter.~~

b~~c~~. *Appeals*

1. Any person aggrieved by any final decision of the Chief of Planning on a site plan application, a nonconforming alteration application, or on an interpretation of a Planning Commission approval may appeal the same to the Planning Commission.

   (a) Such appeal must be filed within 30 days of the decision as shown by the date on the official letter of notification of the decision; and

   (b) Upon receipt of such appeal, the matter must be scheduled for consideration by the Planning Commission in a timely manner.

2. Any person aggrieved by any other final decision of the Chief of Planning may appeal the same to the Board of Appeals.

   (a) Such appeal must be filed within 30 days of the decision as shown by the date on the official letter of notification of the decision; and

   (b) Upon receipt of such appeal, the matter must be scheduled for consideration by the Board of Appeals in a timely manner.

25.04.07 – Chief of Inspection Services

a. *Powers and Duties* – The Chief of Inspection Services has all those powers and duties conferred and imposed upon it by this Chapter, including but not limited to:

   1. Acting as clerk of the Sign Review Board;

   2. Coordinating the authorization ~~of~~ by City departments for the issuance of permits administered by the Building Code, as contained in Chapter 5 of the Code; including but not limited to occupancy permits; and

3. Administering temporary use permits and sign permits in accordance with Section 25.09.04 and Article 18, respectively.

b. *Appeals*

1. Any person aggrieved by a decision of the Chief of Inspection Services pertaining to signs may appeal said decision to the Sign Review Board in accordance with the provisions of Article 18 of this Chapter.

2. Any person aggrieved by any other final decision of the Chief of Inspection Services under the provisions of this Chapter may appeal the same to the Board of Appeals within 30 days of the decision as shown by the date on the official letter of notification of the decision.

25.04.08 – Additional Approvals

In addition to the ~~approving authorities~~approvals identified in this Article, land use and development may be subject to additional approvals required in other chapters of the Code or by resolution of the Mayor and Council, or by ~~an~~ the adopted Plan.

Article 5 – Application and Notification Generally

25.05.01 – ~~Applicability of This Article;~~ Exceptions

a. Except as otherwise provided, t~~T~~he provisions of this Article apply to applications for all procedures, approvals, and permits provided for in this Chapter~~ except:~~.

b. The application and notification procedures contained in this Article do not apply to the actions referenced below:

1. Properties divided between the City and County as provided in Section 25.02.03;

2. Zoning of Annexed Land as provided in Section 25.02.04;

3. Map and Text Amendments as provided in Sections 25.06.01 and 25.06.02, respectively;

4. Administrative Interpretations as provided in Section 25.06.05;

5. Sign Permits as provided in Section 25.18.08, but not including sign approvals by the Sign Review Board;

6. Temporary Use Permits as provided in Section 25.09.04;

7. Occupancy Permits and Temporary Occupancy Permits as provided in Sections 25.07.10 and 25.07.11;

8. Certificates of Approval in Historic Districts as provided in Section 25.07.12;

9. Additional Permits and Approvals as provided in Section 25.07.13;

10. Waivers for alternative energy generation facilities not utilizing fossil fuels as provided in 25.09.06;

11.~~10.~~ Waivers for Satellite Earth Station Antennas and Amateur Service Communication as provided in Section 25.09.08.e.1 and 2; and

12~~1~~. Applications for Subdivision under Article 21.

25.05.02 – Applications

a. *Authority to File* – The following persons may file an application under the provisions of this Chapter:

1. The owner of record of the subject property;

2. An authorized agent of the owner with written authorization to act on the owner's behalf; and

3. A person who has a financial or fiduciary interest in the subject property and/or a contract purchaser with written authorization by the owner that said person is authorized to act on the owner's behalf.

b. *Applications*

1. *Forms* - Applications must be submitted to the City Clerk, Chief of Planning or Chief of Inspection Services, as applicable, on forms provided by the City Clerk, or Chief of Planning, and contain such information as may be required.

2. *Completeness of Submission* – If the application is incomplete, the Chief of Planning or Chief of Inspection Services, as applicable, must advise the applicant in writing as to the information needed to complete the application. In such case, the Chief of Planning may return the incomplete application or retain the application and set a date by which the missing information must be provided.

3. *Acceptance* – An application is not deemed accepted until all submission requirements are met. Acceptance of an application does not constitute any indication of approval.

4. *Fees* – Each application must be accompanied by a fee as determined by resolution of the Mayor and Council.

25.05.03 – Public Notifications

a. *General Notice Requirements*

1. All notices required under this Chapter must comply with the provisions of this Chapter and any greater notice requirements imposed by State law, if applicable; and

2. Unless otherwise specified in this Chapter, all notices must:

(a) *Include the name of the applicant and the application number;*

(b) Identify the date, time, and place of any scheduled public hearing or meeting;

(c) ~~(b)~~ If applicable, describe the property involved in the application by street and street number or, if no street name or number is available, by another general location description;

(d~~e~~) Indicate the nature, scope, and purpose of the application;

(e~~d~~) Indicate how interested parties may be heard or otherwise submit their comments on the application; and

(f~~e~~) Indicate where additional information on the matter may be obtained.

b. *Newspaper Notice* – Where required, the City must cause notice ~~shall~~ to be published in a newspaper of general circulation in accordance with this Chapter or State law, as applicable.

c. *Mailings*

1. ~~The Chief of Planning must provide w~~Written or mailed notification must be provided ~~of~~ for the following:

(a) The intent to file an application and conduct a pre-application Area Meeting.

(b) The filing and acceptance of a completed application;

(~~b~~c) A scheduled public meeting or hearing on an application;

(~~c~~d) A decision of an Approving Authority on an application in accordance with 25.05.06; and

(~~d~~e) Such additional notice as deemed appropriate.

2. ~~The Chief of Planning must~~In order to accomplish the required mailing, the following must be done:

(a) The mailing list for such notice ~~Prepare a list,~~ must be compiled from the current tax assessment ~~,~~ listing ~~all owners and their current addresses of~~ all properties located within at least 500 feet of the boundaries of the subject property, unless another notification area is specified within this Chapter;

(b) Mail notice, by first class mail, to each owner ~~on said list~~at the mailing address on the current tax assessment list ~~and to the resident or tenant of each property.~~; and

(c) In addition, in order to increase notification of tenants, mail notice (by first class mail) shall also be sent to both the owners mailing address and the property location address, if addresses are different on the tax roll; and

(d~~e~~) Mail notice, by first class mail, to civic associations and homeowners associations applicable to or near the subject property.

~~3. Depending on the scope of the proposed development, the Chief of Planning may determine if a greater area for receipt of notice is necessary in order to assure adequate public awareness of the proposed development.~~

d. *Signs* – Except as otherwise provided, signs must be posted in accordance with the following provisions:

1. *Sign to be Furnished by the City* – The required sign(s) will be prepared and furnished to the applicant by the Chief of Planning within two (2) business days after the filing of the complete application, unless otherwise specified in this Chapter.

2. *Date of Posting* – Within three (3) days after receiving the sign from the City, the applicant must erect and maintain a sign on the property that is the subject of the application. Any sign erected as required herein must be maintained and its content updated, at all times by the applicant until final action by the Approving Authority on the application to which it pertains, and thereafter must be removed within seven (7) days from the final action.

3. *Location of Sign* – The required sign must be erected by the applicant as follows:

(a) Within ten feet (10') of each boundary line that abuts a public or private road or street. If the property boundary line is more than 250 feet long, one (1) sign is required every 250 feet.

(b) If no public road abuts thereon, the sign must be placed facing in such manner as may be most readily seen by the public.

(c) For any property that abuts a limited access highway, the sign must be placed at the principal entrance to the property.

~~4. *Sign to be Maintained until Decision* – Any sign erected as required herein must be maintained and its content updated, at all times by the applicant until final action by the Approving Authority on the application to which it~~

~~pertains, and thereafter must be removed within seven (7) days from the final action.~~

~~5~~4. *Unlawful to Remove or Tamper with Sign* – It is unlawful for any person to remove or tamper with any sign erected under this Section during the period it is required to be maintained. Early removal or tampering is subject to the penalties established in Article 19 of this Chapter.

~~6~~5. *Affidavit Required*

(a) On the day of the final hearing on any application the applicant must file an affidavit stating that the sign required by this Section was continuously maintained in accordance with these requirements through the date of the last hearing on such application.

(b) If such sign was not continuously maintained, such affidavit will be sufficient, and subsection 25.05.03.d.6(a), immediately above, is deemed satisfied, if such affidavit states that following the erection of such sign:

(i) The property was inspected at least once per week, and that on each and every occasion through the date of the affidavit such sign was found to be in place; or

(ii) In the event that such sign was damaged, destroyed, or removed, that such sign was repaired or replaced within five (5) days of the inspection which resulted in discovery of the damage to, or destruction or removal of such sign.

e. *Additional Notice*

1. Additional notice may be provided by the Chief of Planning through other methods of communication suited to increase awareness of the application in the communities, including but not limited to, website postings and listserv e-mails.

2. These additional notices are expressly not jurisdictional as provided in Section 25.05.10.

25.05.04 – Modification of Pending Application

a. Modification to a pending application for approval ~~may~~ should ~~only~~ be made ~~after~~ in consultation with the Chief of Planning and in compliance with other requirements of this Chapter. The Chief of Planning will determine whether the

magnitude of the proposed modification warrants a change in scheduling, notification, data submission or a if new application is required.

b. Notwithstanding the provisions of "subsection a"., above, if the project requires action by the Mayor and Council, Planning Commission, Board of Appeals, Historic District Commission, or Sign Review Board, no modification to the proposal can be offered by the applicant after the staff report has been issued, but in no event later than seven (7) days prior to the meeting at which the application will be considered by the Approving Authority. Nothing herein prevents the amendment of an application after the meeting of the Approving Authority.

25.05.05 – Access to Application Files

a. All application files required under this Chapter in the custody of the City are open to public inspection during regular office hours.

b. Application files must not be removed from the office in which they are maintained, except by officials and employees of the City.

c. Copies of material in the files will be provided upon payment of copying charges in accordance with City policy or may be provided electronically upon request.

25.05.06 – Notification of Decision

a. Notice of all decisions by any of the Approving Authorities made pursuant to this Chapter must be provided by the Approving Authority, or the clerk thereto, within ten (10) days after the decision is rendered via written notice by first class mail to the applicant or petitioner and to any other party of record, unless such party requests an e-mail notification in lieu of first class mailing.

b. A copy of the notification must be made a part of the official record by the Approving Authority or the clerk of the Approving Authority.

c. The time limitation for appeals will run from the date of the letter providing the notification of the decision or, in the case of a resolution or ordinance adopted by the Mayor and Council, from the date of the adoption of the resolution or ordinance..

25.05.07 – Changes Amendments to Approved ProjectsDevelopment

a. *Application Required* – Except as otherwise provided, an application to change amend any previously approved application development must be filed with the Chief of Planning, or the Chief of Inspection Services where approval of the Sign Review Board is involved, in accordance with the provisions of this Article.

b. *Minor ~~Changes~~ Amendments to Approved ~~Applications~~ Development*

1. Any application for a ~~change~~ n amendment which does not significantly deviate from the terms and conditions of the original approval and would effectively carry out the intent of the Approving Authority's original approval may be considered and acted upon by the Chief of Planning, or the Chief of Inspection Services where approval of the Sign Review Board is involved**.** ~~***Examples of minor changes include, but are not limited to, the following:***~~

2. An application may be processed as a minor amendment if it does not*:*

   (a) ~~Substitution of landscaping material;~~increase the height of any building,

   (b) ~~Substitution of building materials or other architectural elements; or~~increase the floor area of any non-residential building,

   (c) ~~The movement of proposed aspects of a plan up to two feet (2'), as long as the deviation does not require a variance from the base zone's development requirements.~~increase the number of dwelling units.

~~modification~~3. Such application may only be approved if it results in a minimal effect on the overall design, layout, quality, or intent of the plan and is limited to a change in:

   (a) a parking or loading area, or

   (b) landscaping, a sidewalk, recreational facilities, recreational area, public use space, or open area in a manner that does not alter basic elements of the site plan;

~~2. The Chief of Planning or Chief of Inspection Services, as applicable, may seek the input of the applicable Approving Authority to make a determination whether the change is minor.~~

~~3~~4. ~~Notice is not required prior to approval of a minor change; and.~~

~~4.~~ Minor ~~changes~~ changes ~~may be approved by the Chief of Planning and do not require~~ are not subject to the notice under ~~the~~ provisions of Section 25.05.03 or Article 7.

5. Where the Chief of Planning determines that the change is not minor, the application is referred to the Approving Authority for review

~~Notice is not required for approval of a minor change.~~

c. *Major ~~Changes~~ Amendments to Approved ~~Projects~~Development*

1. Where the Chief of Planning determines that a requested change is too significant to be a minor change but is not so substantial as to require an entirely new application for approval, the requested change must be reviewed and approved by the original Approving Authority as an amendment to the original approval.

2. An application for a ~~significant change~~ major amendment is subject to such notice and procedural requirements as set forth in Articles 5, 6, and 7.

3. ~~Amendments approved by the Planning Commission are limited to the substance or area encompassed by the amendment application and will not affect other aspects of the approved application without the conse~~Amendments may not modify any aspect of the approved development other than that substance or area encompassed b the amendment application. ~~nt of the application~~. ~~Nothing, however, shall preclude the Planning Commission~~The Approving Authority may ~~from~~ consider the relationship of~~ing~~ all aspects or areas of the approved development in determining whether or not the requested amendment is appropriate.

d. *Substantial Changes Requiring a New Application* – Where, in the opinion of the Chief of Planning, the requested change to an approved development is so extensive as to amount to a comprehensive change to more than 50% of the project area or to otherwise change the essential character and impact of the approval, such change may not be made by way of an amendment to the original approval, but rather requires the filing of an entirely new application for approval.

25.05.08 – Extension of Implementation Period

a. The date by which activity pursuant to an approval must commence (Implementation Period) in order to avoid expiration of the approval may be extended only when all of the following conditions exist:

1. The provisions of this Chapter expressly allow the extension;

2. An extension request is filed prior to the expiration of the approval; and

3. The extension request is in writing and includes justification.

b. Unless otherwise ~~noted~~provided, authority to grant extensions of time shall rest with the Approving Authority that granted the original approval being extended.

c. Extensions may be granted only upon good cause. In determining whether good cause has been shown, Approving Authority must consider

(i) the actions taken by the applicant to diligently pursue implementation of the approval, including but not limited to execution of required documents and pursuing other required approvals, and

(ii) whether the approved development complies with all then current provisions of this chapter and other applicable laws and with the current Plan recommendataions, and

(iii) such other factors deemed to be relevant. ~~No more than one (1) extension can be granted for reasons due primarily to market conditions or financial difficulties.~~

d. An extension of the implementation period of an approval does not allow any change from the conditions of the approval for which the extension is requested.

25.05.09 – Appeals

Any party of record aggrieved by a decision of any Approving Authority may appeal that decision in accordance with the applicable provisions for that Approving Authority as set forth in ~~Article 4 of~~ this Chapter.

25.05.10 – Certain Defects Not Jurisdictional

Failure to comply with any of the requirements of this Article 5, except for those requirements imposed by State law, is not a jurisdictional defect.

Article 6 – Procedures for Map and Text Amendments, Variances, ~~Special Exceptions,~~ and Administrative Actions

25.06.01 – Zoning Map Amendments

a. *Compliance Required* - The zoning map cannot be amended except in compliance with the procedures set forth in this Article and other applicable law.

b. *Types of Applications* – An application may be filed for any of the following types of amendment to the zoning map:

1. *Local Amendment* – A local map amendment covering a single tract of land, all portions of which are proposed to be classified in one (1) or more zones;

2. *Sectional Amendment* – A sectional map amendment covering a section of the City, portions of which may be proposed to be classified in different zones; or

3. *Comprehensive Amendment* – A comprehensive map amendment covering the entire City, portions of which may be proposed to be classified in different zones.

c. *Applications*

1. *Authority to File*

(a) *Local Map Amendment* – An application for a local map amendment may be filed by any governmental agency or by a person with a financial, contractual, or proprietary interest in the property to be affected by the proposed amendment.

(b) *Sectional and Comprehensive Amendment* – An application for a sectional or comprehensive map amendment may be filed only by the Planning Commission or the Mayor and Council.

2. *Submission*

(a) *General Requirements* - An application for an amendment to the zoning map must be submitted to the City Clerk on forms approved by the Chief of Planning, and be accompanied by such fee as is determined by resolution of the Mayor and Council.

(b) *Complete Application* - The application will not be deemed to be complete until all submission requirements have been met.

d. *Local Amendment Applications*

1. *Limitation on Successive Applications* – The City Clerk must not accept for filing any application for a local amendment to the zoning map if the application is for the reclassification of the whole or any part of land, the reclassification of which has been approved or denied by the Mayor and Council on its merits within 12 months prior to the of date of the application for filing.

2. *Limitation on Amendments to Applications* – After acceptance for filing, an application for a local amendment to the zoning map may not be amended so as to increase the area proposed to be reclassified or to change the zone or alternate zones requested to any other zone.

e. *Public Notification of Pending Application*

1. *Notification Requirements* – Notice required under this Section must be given in accordance with the provisions of the notice requirements found in Section 25.05.03.

2. *Newspaper Notification* – Publication in a newspaper of general circulation is required prior to a hearing in accordance with the requirements of State law.

3. *Sign Required* – In the case of a local amendment, the owners of the subject property must post a sign or signs in accordance with the provisions of Section 25.05.03.d.

4. *Written Notification to Property Owners* – At least 15 days prior to the hearing on any application for a local or sectional amendment to the zoning map, the City Clerk must send written notice of such hearing by ~~certified~~ first class mail to:

   (a) *Local Amendment* – In the case of a local amendment, the owners of all real property within 500 feet of the subject property.

   (b) *Sectional Amendment* – In the case of a sectional amendment, the owners of all real property within the delineated area of such application, and the owners of all real property within 500 feet of any property within such area.

   (c) *Comprehensive Amendment* – In the case of a comprehensive City-wide map amendment, mailed notice is not required.

f. *Access to Application Files* – Access to application files under this Section is subject to the provisions found in Section 25.05.05.

g. *Referring Application to the Planning Commission* – Within five (5) days after acceptance of any application under this Section, the City Clerk must transmit a copy of the application to the Planning Commission. The Commission may submit a written recommendation which will be placed in the application file by the Clerk and become a part of the record on the application.

h. *Hearing on Application* – No application made under this Section may be granted unless a public hearing has been held on the application by the Mayor and Council in accordance with the requirements of State law.

i. *Action on Application*

1. An application may be granted by ordinance or denied, dismissed, or allowed to be withdrawn by resolution of the Mayor and Council.

2. An application may be dismissed if the Mayor and Council finds that it does not comply with any procedural requirements of this Chapter or other applicable law.

j. *Withdrawal of Application* – An application for a local map amendment for which a public hearing has been conducted may be withdrawn only with the approval of the Mayor and Council. The Mayor and Council may decline to permit the withdrawal and decide the application on its merits or may permit withdrawal subject to any reasonable condition including but not limited to, the imposition of a time limitation within which no subsequent application may be filed, the limitation not to exceed three (3) years.

k. *Notification of Decision and Appeal*

1. Notification of decisions must be in accordance with Section 25.05.06.

2. The time limitation for appeals will run from the date of the ordinance or resolution adopted by the Mayor and Council.

25.06.02 – Text Amendments

a. Scope

1. Except as otherwise provided,no provision of this Chapter which directly affects property can be amended except in compliance with the procedures set forth in this Article and any other applicable law.

~~a. *Scope* – No provision of this Chapter which directly affects property can be amended except in compliance with the procedures set forth in this Article and any other applicable law.~~

2. This Section 25.06.02 does not apply to amendments to Article 4, and Section 25.06.01, Section 23.06.02, and Article 19.

b. *Applications*

1. *Authority to File* – An application for an amendment to the text of this Chapter may be made by any interested person or governmental agency.

2. *Submission*

(a) An application for an amendment to the text of this Chapter must be submitted to the City Clerk.

(b) An application for a text amendment must be submitted on forms approved by the Chief of Planning and be accompanied by such fee as is determined by resolution of the Mayor and Council. All information specified on such forms must be supplied.

(c) The time limits specified in this Chapter will commence when all submission requirements are met as determined by the Chief of Planning.

c. *Public Notification of Pending Application* – Publication in a newspaper of general circulation is required prior to any hearing on a zoning text amendment application, in accordance with State law.

d. *Referring Application to the Planning Commission*

1. *City Clerk Responsibility* - Within five (5) days after acceptance of any text amendment application, the Clerk must transmit a copy of the application to the Planning Commission. The Commission may submit a written recommendation to the Mayor and Council, which will be placed in the application file by the Clerk and become a part of the record on the application.

2. *Hearing before Planning Commission Required for Article 21 Amendment* – Prior to submitting its recommendation of any proposed amendment to Article 21, "Plats and Subdivision~~s~~ Regulations", the Planning Commission must hold a public hearing on the application in accordance with the requirements of State law relating to proposed subdivision regulations.

e. *Access to Application Files* – Access to application files under this Section is subject to the provisions found in Section 25.05.05.

f. *Hearing on Application* – No application made under this Section may be granted unless a public hearing has been held on the application by the Mayor and Council in accordance with the requirements of State law.

g. *Action on Application*

1. A text amendment application may be granted by ordinance or denied, dismissed, or allowed to be withdrawn by resolution of the Mayor and Council.

2. A text amendment application may be dismissed if the Mayor and Council finds that it does not comply with any procedural requirements of this Chapter or other applicable law.

h. *Withdrawal of Application* – An application for a text amendment for which a public hearing has been conducted may be withdrawn only with the approval of the Mayor and Council.

25.06.03 – Variances

a. *Scope* – Variances may be granted by the Board of Appeals from the strict application of density, bulk, or area requirements of the development standards set forth in this Chapter.

b. *Application* – Applications for variances must be submitted in accordance with the provisions of Article 5.

c. *Public Notification of Pending Application* – Written notice of a pending variance application must be provided in accordance with the provisions of Section 25.05.03.c and d.

~~d. *Referring Application to the Planning Commission* – Within five (5) days after acceptance of any application under this Section, the Chief of Planning must~~

~~transmit a copy of the application to the Planning Commission. The Commission may submit a written recommendation to the Board of Appeals which will be placed in the application file by the Chief of Planning and become a part of the record on the application.~~

~~e~~d. *Hearings* – A hearing must be held by the Board of Appeals in accordance with provisions of State Law, this Chapter ~~and the Rules of Procedure for the Board~~.

~~f~~e. *Findings* – A variance may be approved by the Board of Appeals if it finds that:

1. The variance would not be contrary to the public interest;

2. The request for the variance is the result of conditions peculiar to the property and not the result of any action taken by the applicant;

3. Literal application of this ~~ordinance~~ Chapter would result in practical difficulty; and

4. The approval of the variance is ~~generally~~ not inconsistent with the purposes of this Chapter.

~~g~~f. *Conditions* – In approving a variance, the Board of Appeals may impose terms, conditions, and restrictions that are reasonably necessary to protect adjacent properties, the neighborhood, and the residents and workers therein.

~~h~~g. *Notice of Decisions* – Notice of a decision of the Board of Appeals must be given in accordance with Section 25.05.06.

h. *Implementation Period* - A variance approval expires under the following circumstances:

1. *Site Plan Approval Required* - If site plan approval is required to exercise the rights granted by the Board's decision, application for such approval must be filed within six (6) months of the date of the Board's decision, or the variance approval shall expire. The filing of an application for site plan approval shall extend the rights granted by the Board's decision to a date one (1) year from the date of the Board's decision. The approval of a site plan shall extend the rights granted by the Board's decision for the same period of time that the rights granted by the site plan approval exist, including any extensions thereof;

2. *Building Permit Required* - If a building permit is required to exercise the rights granted by the Board's decision, such building permit must be issued

and construction started within 12 months of the date of the Board's decision, or within the time limit as extended by the approval of a site plan, or the variance approval shall expire; and

3. *No Building Permit Required* - If a building permit is not required to exercise the rights granted by the Board's decision, such rights must be established within 12 months of the Board's decision, or the approval shall expire.

i. *Extension* - The Board may, for good cause shown, grant no more than two (2) extensions of not more than six (6) months each for any prior grant of a variance subject to the provisions for an extension of Section 25.05.08, "Extension of Implementation Period".

j~~i. *Term of Approval* – The approval of a variance by the Board of Appeals is subject to the provisions of Section 25.04.03.fg, "Expiration of Board's Approval of Special Exceptions and Variances."~~

. Where deemed appropriate, the Chief of Planning or Chief of Inspection Services may issue a Notice of Violation in accordance with this Section, 25.19.04, prior to pursuing any additional remedies for violations of this Chapter.

~~j~~k.. *Violations* – Whenever, in the opinion of the Chief of Planning, there has been a violation of any terms, conditions, or restrictions upon which a variance was granted, the Chief of Planning will establish a date for a public hearing by the Board of Appeals to determine whether or not a violation has occurred and if the variance should be revoked.

~~. *Zoning Map Indication* – The grant of a variance shall be noted upon the Zoning Map.~~

~~**25.06.04 – Special Exceptions**~~

~~Special exceptions are subject to the procedural requirements of Article 7 and all applicable requirements of Article 15.~~

25.06.~~05~~ 04 – Administrative Interpretation

a. The Chief of Planning has final interpretation authority on all provisions of this Chapter.

b. Such interpretations must be recorded and kept on file for public viewing in accordance with Section 25.05.05.

c. An interpretation by the Chief of Planning may be appealed to the Board of Appeals in accordance with Section 25.04.06.c.2.

25.06.~~06~~ 05 – Administrative Adjustments in Single Unit Dwelling Residential Zones.

a. *Purpose and Authority* – The Chief of Planning is authorized to determine and make administrative adjustments from the regulations of this Chapter when:

1. It is found to be in harmony with its general purpose and intent provided in Section 25.01.02;~~, only:~~

2~~1~~. In the specific instances set forth in this Section 25.06.06; and

3~~2~~. Where the Chief of Planning makes findings of fact in accordance with the standards prescribed in this Section.

b. *Permitted Administrative Adjustments* – Administrative adjustments from the regulations of this Chapter may be granted by the Chief of Planning only in ~~Low Density~~Single Dwelling Unit Residential Zones, in accordance with the criteria established in this Section, and may be granted only for the following:

1. *Setbacks* – To reduce the required yard setback by no more than ten percent 10%.

2. *Lot Coverage* – To ~~decrease~~ increase the lot coverage ~~and~~ or decrease landscaping requirements by no more than ten percent (10%).

c. *Application* – Applications for administrative adjustments must be submitted and processed in accordance with the provisions of Article 5, including but not limited to, amendments, notice of decisions, and appeals of decisions.

~~d. *Public Notification of Pending Application* – A sign must be posted on the property that is the subject of the application in accordance with the requirements in Section 25.05.03.d.~~

de. *Review Procedures* – The following procedures apply to the review and consideration of an application for an administrative adjustment:

1. *Staff Review* – The Chief of Planning, after having determined that the submission is complete, will distribute copies of the application to appropriate City departments for review.

2. *Staff Report* – Any City department reviewing the application will prepare ~~a~~ staff ~~report~~ comments on the application and transmit the ~~staff report~~comments to the Chief of Planning.

~~3. *Public Meeting* – The Chief of Planning must hold a public meeting on each application if an objection to the application is raised.~~

~~(a) *Notice* – Written notice must be provided by the Chief of Planning in accordance with the provisions of Section 25.05.03.c.~~

~~(b) *Meeting Procedure* – The following provisions apply to public meetings:~~

~~(i) *Right to be Heard* – Parties in interest and citizens must have an opportunity to be heard at such public meeting.~~

~~(ii) *Registration Requirement* – Any person desiring to be heard at any public meeting must register his or her appearance with the Chief of Planning, in writing, by providing his or her name, address, telephone number, and person represented, if any. A person can register his or her appearance at any time prior to the conclusion of the public meeting. Any person who fails to register as required is not a party of record at such public meeting.~~

~~(c) *Contents of Record* – The Chief of Planning must promptly include in the application file a list of those persons registering their appearance, who become parties of record. Such list will become part of the official record of the proceedings.~~

~~(d) *Adjournment of Meeting* – The meeting may be adjourned from time to time to a date certain on public announcement at the meeting of the date, time, and place for resumption of such hearing.~~

~~4. *Action on Application*~~

~~(a) Within 30 days of the conclusion of the public meeting, the Chief of Planning must decide to:~~

~~(i) Approve the application;~~

~~(ii) Approve the application subject to specific conditions; or~~

~~(iii) Deny the application.~~

~~(b) The Chief of Planning's decision must be based on written findings of fact in accordance with this Section and may impose such conditions or restrictions upon the premises benefited by an administrative adjustment as may be necessary to comply with the intent and purposes of the standard or other requirement that is adjusted.~~

~~5. *Notice of Decision* – The Chief of Planning must send notice of the decision in accordance with the provisions of Section 25.05.06.~~

~~f~~e. *Review Criteria and Findings* – An administrative adjustment may not be granted unless the Chief of Planning makes the following findings based upon the evidence of record:

1. *Good Cause Shown* – The applicant has shown good cause for granting the administrative adjustment.

2. ~~*Public Safety and Welfare*~~*Consistency With Purpose* – ~~The granting of the adjustment will not be detrimental to the public safety or welfare or injurious to other property or improvements in the neighborhood in which the property is located~~The is not inconsistent with the purposes of this Chapter as set forth in Section 25.01.02.

3. *Total Cumulative Adjustment* - The total cumulative adjustment to the regulation that is the subject of the application does not exceed ten percent (10%). This total cumulative adjustment is to be considered in connection with all adjustments made to the applicable property and not solely to the adjustments in connection with any single application for adjustment.

4. *Notice of Decision* – The Chief of Planning must send notice of the decision in accordance with the provisions of Section 25.05.06.

~~25.06.07~~ ~~Failure to Comply with Terms, Conditions, and Restrictions~~

~~a.If the Chief of Planning has reason to believe that any of the terms, conditions, or restrictions upon which an application was granted have not been complied with, the Chief of Planning may take the following actions:~~

~~1.Provide written notice by first class mail to the owner of the use or structure to which the term, condition, or restriction pertains, the owner of the property on which the use or structure is located, the owners of all properties within a radius of at least 500 feet of the lot boundaries of the use or structure or larger area if determined to be necessary by the Chief of Planning, and all parties of record in the proceedings that resulted in the approval of the use or structure, that a public meeting or public hearing (if a public hearing was required prior to approval) will be held by the Approving Authority that granted the original approval to which the terms, conditions, or restrictions were applied to determine if a violation has occurred; and~~

~~2.Post a sign on the site as provided in Article 5.~~

~~b.If following the public hearing the Approving Authority determines, based on the public record, that a violation has occurred, the Approving Authority is authorized to suspend or revoke the grant of such approval or take other action it deems necessary to assure compliance with the terms, conditions, and restrictions of the approval.~~

Article 7 – Procedures for Site Plans and Project Plans, Special Exceptions ~~Review,~~ and Other Permits ~~/ Approvals~~

25.07.01 –Site Plan, Project Plan, and Special Exception Approval Required

a. *Site Plan Approval*

1. *General Requirement* – A site plan application, where required by this Chapter, must be approved before any building, other structure, or land may be:

(a) Used;

(b) Constructed;

(c) Converted, wholly or in part, to any other use; or

(d) Structurally ~~changed~~altered.

~~2.~~*2.* *Exceptions* ~~– A site plan approval is not required for:~~

~~(a)~~ Site plan approval is not required for:

(a) Single unit detached or semi-detached residential dwellings and related accessory uses on a record lot in the Single Dwelling Unit Residential Zones, ~~uses~~ except for ~~as may be required under the provisions of~~ applications for increased floor area ratio or height as set forth in Section 25.10.09~~8~~; or

(b) ~~U~~Uses allowed by a temporary use permit issued by the Chief of Inspection Services.

~~3.~~3. *Required Findings* – A site plan application, where required in accordance with this Chapter, may be approved only if the applicable Approving Authority finds that approval of the application will not:

(a) Adversely affect the health or safety of persons residing or working in the neighborhood of the proposed development;

(b) Be detrimental to the public welfare or injurious to property or improvements in the neighborhood;

~~2~~

~~(c)~~(c) Overburden existing and programmed public facilities as set forth in Article 20 of this Chapter and as provided in the adopted Adequate Public Facilities Standards;

(d) Adversely affect the natural resources or environment of the City or surrounding areas;

(e) Be in conflict with the Plan;

~~(d)~~(f) Constitute a violation of any provision of this Chapter or other applicable law.

(g) Be incompatible with the surrounding uses or properties.

b. *Project Plan Approval*

1. *General Requirement* – A project plan application, where required in accordance with this Chapter, must be approved before any building, other structure, or land may be:

(a) Used;

(b) Constructed;

(c) Converted, wholly or in part, to any other use; or

(d) Structurally ~~changed~~altered.

2. *Required Findings* – A project plan application, where required in accordance with this Chapter, may be approved only if~~:~~

~~(a)~~The Mayor and Council finds that approval of the application will not:

~~(i)~~(a) Adversely affect the health or safety of persons residing or working in the neighborhood of the proposed use;

(b) ~~(ii)~~ Be detrimental to the public welfare or injurious to property or improvements in the neighborhood;

~~(iii)~~(c) Overburden existing and programmed public facilities as set forth in Article 20 of this Chapter and as provided in the adopted Adequate Public Facilities Standards; or

~~2~~

~~(iv)~~(d) Constitute a violation of any provision of this Code or other applicable law.

(e) Adversely affect the natural resources or environment of the City or surrounding areas;

(f) Be in conflict with the Plan; or

(g) Be incompatible with the surrounding uses or properties.

~~(b)The Mayor and Council must also make the findings required for preliminary plan approval set forth in Section 25.21.09.e.~~

c. *Special Exceptions*

~~3.~~1. *General Requirement* – A special exception, where required in accordance with this Chapter, must be approved before any building, other structure, or land may be:

(a) Used;

(b) Constructed;

(c) Converted, wholly or in part, to any other use; or

(d) Structurally ~~changed~~altered.

2. *Findings* – The Board of Appeals must not grant any petition for a special exception unless it finds that the requirements of 25.15.01.a.2 have been met.

d. *Relation to Building Permit* –Where a site plan~~,~~ or project plan approval~~, or special exception~~ is required, no building permit may be issued until such approval has been obtained.

25.07.02 – ~~Review~~ Application Procedure for Site Plans, Project Plans, and Special Exceptions

a. *Application* – Applications for site plans and project plans must be submitted in accordance with the provisions of Section 25.05.02 and the following pre-application requirements:~~.~~

1. *Pre-Application Staff Meeting and Transportation Review* – The requirements of this subsection are in addition to any pre-application transportation review that may be required by the Comprehensive Transportation Review.

~~2~~

~~1.~~2. *Pre-Application Area Meeting* - In all cases, the applicant is required to conduct a pre-application meeting with residents of the neighborhood in which the project is proposed to outline the scope of the proposal.

~~3.*Pre-Application Transportation Review* – The requirements of this subsection are in addition to any pre-application transportation review that may be required by the Comprehensive Transportation Review.~~

~~4.~~3. *Pre-Application Natural Resources Filing* - Prior to filing an application, an applicant must have a validly approved Natural Resources Inventory (NRI) and Forest Stand Delineation (FSD) plan as set forth in the City's *Environmental Guidelines.*

~~2.~~4. ~~*Potential Historic District*~~*Historic Review* –

(a) – ~~Regardless of the total number of points as determined by Section 25.07.02.b below, if a project plan proposes demolition, as defined in Section 25.03.02, of a potential historic resource identified through the Natural Resource Inventory (NRI) process, the property will be evaluated for Historic District eligibility by the Chief of Planning. If the Chief of Planning makes a preliminary determination that the property meets the minimum eligibility criteria, or at the request of the Historic District Commission, the matter will be placed on the agenda of the Historic District Commission for an evaluation of property's eligibility for historic designation and potential recommendation to the Mayor and Council for historic designation in accordance with Section 25.14.01.d.~~ If an application proposes demolition of a building or structure, the building or structure will be evealuated for eligibility for historic designation prior to acceptance of the application for site plan, project plan, or special exception.

(b) If the NRI identifies any site, building, or structure as having potential historic significance, the applicant must apply to the Historic District Commission for an evaluation of the subject property for eligibility for historic designation

(c) Notwithstanding the foregoing, if at any time during the review of a site plan, project plan or special exception the Chief of Planning determines that a site, building or structure has potential historic significance, the application review process will be suspended and the Historic District Commission will evaluate the subject property for eligibility for historic designation under the provisions of §25.14.01.d.

b. ~~*Review*~~ *Application Procedure, in General* – The level of review ~~procedure~~ for each application is based on a point system, provided in the chart below. Each application must be evaluated on the ~~elements of the project,~~ acreage of the site, the number of dwelling units proposed, the square footage of non-residential space, the residential impact area, and the traffic impact of development proposed. Each of these items is allocated a number of points which are added together to determine the complete point valuation for the project. ~~If the Chief of Planning determines that the project may have ramifications beyond the calculated point total, the Chief of Planning is authorized to move the project up one (1) level in the review process.~~

Points / Elements	**1**	**2**	**3**	**4**	**Points**
Tract size – Acres	1 or fewer	1.1 to 2.5	2.6 to 5	5.1 or greater	__
Dwelling Units	5 or fewer	6 to 50	51 to 150	151 or greater	__
Square Footage of Non-Residential Space	5,000 or fewer square feet	5,001 to 10,000 square feet	10,001 to 50,000 square feet	50,001 or greater square feet	__
Residential Area Impact	No residential development in a single dwelling unit residential zone within ¼ mile of the project	35% of area within ¼ mile of the project area is comprised of single-unit detached residential units	65% of area within ¼ mile of the project area is comprised of single-unit detached residential units	Development is within single-unit detached unit area.	__
Traffic Impact – Net new peak hour trips	Fewer than 30 trips	30 – 74 trips	75 – 149 trips	150 or more trips	__
Points Total					The total of the points determine the level of notification.

c. *Site Plan Level of Review*

1. *Level One (1) – Site Plan Review*: If the elements of the proposed project total six (6) points or fewer, as determined in Section 25.07.02.b above, the Chief of Planning will complete the site plan review in accordance with Sections 25.07.01.a.3 and 25.07.03.

2. *Level Two (2) – Site Plan Review*: If the elements of the proposed project total seven (7) to nine (9) points, the Chief of Planning will complete a preliminary review and make a recommendation to the Planning Commission and the Planning Commission will complete a final review of the site plan in accordance with Sections 25.07.01.a.3 and 25.07.04.

~~2~~

3. *Level Three (3) – Site Plan Review*: If the elements of the proposed project total 10 to 12 points, the Chief of Planning will complete a preliminary review and make a recommendation, Planning Commission will complete a preliminary review and a final review of the site plan and take action in accordance with Sections 25.07.01.a.3 and 25.07.05.

d. *Project Plan Review* – If the elements of the proposed project total 13 or more points, the development is subject to project plan review. The Mayor and Council and Planning Commission will jointly conduct an initial review of the plan application, the Chief of Planning and Planning Commission will perform a preliminary review, make a recommendation to the Mayor and Council, and the Mayor and Council will then complete a final review of the plan in accordance with Sections 25.07.01.b.2 and 25.07.06. The Planning Commission will thereafter review subsequent site plans implementing the approved project plan in accordance with the level two (2) site plan review procedures under Section 25.07.04 ~~below~~.

e. *Special Exception Review* – Regardless of the total number of points as determined in Section 25.07.02.b, ~~above~~ the Board of Appeals will review and grant special exceptions in accordance with the ~~findings~~ provisions of Section 25.15.01.a.2. After the Board of Appeals grants ~~the~~ a special exception, the Planning Commission must approve a site plan in accordance with the ~~provisions~~ level two (2) site plan procedures of this Article.

25.07.03 – Level One (1) Site Plan Review

An application for a site plan review with a total of six (6) points or fewer, as determined in Section 25.07.02.b above, is subject to the following provisions:

1. *Pre-Application Staff Meeting* – The applicant must hold a meeting with staff of the City's Development Review Committee (DRC)~~Community Planning and Development Services~~ prior to submitting an application, in order to outline the scope of the project and the scope of the Comprehensive Transportation Review. At that meeting, the Chief of Planning will provide the applicant with a non-binding point evaluation for the project, which will be re-evaluated after the application is submitted.

2. *Pre-Application Area Meeting* – The applicant must hold an area meeting prior to submitting an application to outline the scope of the project and receive comments. The applicant must send notice to the City and to property owners within 750 feet of the project area no less than two (2) weeks prior to any meeting.

~~2~~

3. *Application* – The applicant must file an application in accordance with the provisions of Article 5.

4. *Notice* – The ~~Chief of Planning~~applicant must send an informational notice of the application filing in accordance with the provisions of Section 25.05.03.c to all property owners ~~and residents~~ within 750 feet from the boundaries of the area described in the application within 30 days. ~~Notification of a level one (1) site plan review must state that all interested parties have 30 days from the date of the letter to provide comments to the Chief of Planning.~~

5. *Sign* – A sign must be posted in accordance with the provisions of Section 25.05.03.d.

6. *Conditions of Approval* – Approvals may be subject to any condition that the Chief of Planning finds necessary to protect the public health, safety, aesthetics, and welfare of the community and to ensure that the proposed use or development will be consistent with the purpose and intent of this Chapter.

~~6. *Public Meeting* – The Chief of Planning must hold a public meeting on an application if an objection to the application is raised with the 30-day comment period.~~

~~(a)*Notice* – Written notice of the meeting must be provided by the Chief of Planning in accordance with the provisions of Section 25.05.03.c.~~

~~(i) Notice must be sent to all property owners and residents within 750 feet of the boundaries of the area described in the application.~~

~~(ii) Notice must be sent no less than two (2) weeks prior to the meeting.~~

~~(b) *Meeting Procedure* – The meeting must be conducted in accordance with the procedures contained in Section 25.06.06.e.3.~~

~~7. *Conditions of Approval* – Approvals may be subject to any condition that the Chief of Planning finds necessary to protect the public health, safety, aesthetics, and welfare of the community and to ensure that the proposed use or development will be consistent with the purpose and intent of this Chapter.~~

7. ~~*Implementation Period – The approval of a Level One (1) site plan is subject to the provisions of Section 25.04.06.b.*~~

~~2~~

Implementation Period – The approval of a level one (1) site plan is subject to the implementation provision of Section 25.07.06.

8~~9~~. *Notice of Decision* – Notice of the Chief of Planning's decision must be sent in accordance with the provisions of Section 25.05.06.

9~~10~~. *Appeals* ~~– Appeals of the Chief of Planning decision may be made in accordance with Section 25.04.06.c.~~
- Any person aggrieved by any final decision of the Chief of Planning on a level one (1) site plan application, may appeal the same to the Planning Commission in accordance with Section 25.04.06.

25.07.04 – Level Two (2) Site Plan Review

An application for a site plan review with seven (7) to nine (9) points, as determined in Section 25.07.02.b above, is subject to the following provisions:

1. *Pre-Application Staff Meeting* – The applicant must hold a meeting with staff of the City's Development Review Committee ~~Community Planning and Development Services~~ prior to submitting an application, in order to outline the scope of the project and the scope of the Comprehensive Transportation Review. At that meeting, the Chief of Planning will provide the applicant with a non-binding point evaluation for the project, which will be re-evaluated after the application is submitted.

2. *Pre-Application Area Meeting* – The applicant must hold an area meeting prior to submitting an application, to outline the scope of the project. The applicant must send notice to property owners and ~~residents~~ tenants within 1,000 feet of the project area, no less than two (2) weeks prior to the meeting.

   ~~3.~~2. *Initial Application* – The applicant must file an initial application in accordance with the provisions of Article 5 and must provide a date for an area meeting.

4. *Notice* – The ~~Chief of Planning~~applicant must send notice of the application filing in accordance with the provisions of Section 25.05.03.c. to all property owners and ~~residents~~ tenants within 1,000 feet from the boundaries of the area described in the application.

5. *Sign* – A sign must be posted in accordance with the provisions of Section 25.05.03.d.

~~2~~

6. *Area Meeting* – The applicant ~~must then~~is encouraged to hold ~~an~~ area meeting(s) to explain the plan and any revisions to property owners and residents of the area within 1,000 feet of where the development is proposed.

~~(a) The Chief of Planning must send notice of the area meeting to all property owners and residents within 1,000 feet of the boundaries of the area described in the application.~~

~~(b)The notice must be sent no less than two (2) weeks prior to the meeting.~~

~~7. *Revised Application* – The applicant must file a revised application, if needed based on comments received at the area meeting, in accordance with the provisions of Article 5.~~

7~~8~~. *Notice* – The ~~Chief of Planning~~applicant must send notice of the Planning Commission meeting and any ~~revised~~ revisions to the application, if applicable, in accordance with the provisions of Section 25.05.03.c. The notice must be sent no less than two (2) weeks prior to the Planning Commission meeting to property owners and residents within 1,000 feet of where the development is proposed.

~~(a) The Chief of Planning must send notice to all property owners and residents within 1,000 feet of the boundaries of the area described in the application.~~

~~(b) The notice must be sent no less than two (2) weeks prior to the Planning Commission meeting.~~

8~~9~~. ~~*Final Review;*~~ *Public* ~~*Meeting*~~ *Hearing* – The Planning Commission must conduct a final review of, and hold a public ~~meeting~~ hearing on~~,~~ the revised application for a Level two (2) site plan approval.

9~~10~~. *Conditions of Approval* – Approvals may be subject to any condition that the Planning Commission finds necessary to protect the public health, safety, aesthetics, and welfare of the community and to ensure that the proposed use or development will be consistent with the purpose and intent of this Chapter. The Planning Commission must make the findings in Section 25.07.01.3.

1~~1~~0. *Implementation Period* – The approval of a level two (2) site plan is subject to the implementation provisions of Section 25.~~04.02.f~~07.06.

~~2~~

11~~2~~. *Notice of Decision* – The Chief of Planning must send notice of the Planning Commission's final ~~review~~ decision in accordance with the provisions of Section 25.05.06.

12. *Appeals* – Unless otherwise provided, any person aggrieved by any final decision of the Commission may appeal the same to the Circuit Court for the County. Such appeal must be taken according to the Maryland Rules as set forth in Title 7, Chapter 200.

25.07.05 – Level Three (3) Site Plan Review

An application for a site plan review with 10 to 12 points, as determined in Section 25.07.02.b ~~above~~, is subject to the following provisions:

1. *Pre-Application Staff Meeting* – The applicant must hold a meeting with staff of the City's ~~Community Planning and~~ Development Review Committee ~~Services~~ prior to submitting an application to outline the scope of the project and the scope of the Comprehensive Transportation Review. At that meeting, the Chief of Planning will provide the applicant with a non-binding point evaluation for the project, which will be re-evaluated after the application is submitted.

2. *Pre-Application Area Meeting* – The applicant must hold an area meeting prior to submitting an application to outline the scope of the project and receive comments. The applicant must send notice to the City and to property owners and ~~residents~~ tenants within 1,250 feet of the project area no less than two (2) weeks prior to the area meeting.

3. *Initial Application* – The applicant must file an initial Level Three (3) site plan application in accordance with the provisions of Article 5.

4. *Notice* – The ~~Chief of Planning~~applicant must send notice of the application filing in accordance with the provisions of Section 25.05.03.c. to all property owners and ~~residents~~ tenants within 1,250 feet of the project area described in the application.

5. *Sign* – A sign must be posted in accordance with the provisions of Section 25.05.03.d.

6. *Area Meeting* – The applicant is ~~must then~~ encouraged to hold ~~an~~ area meetings to explain the plan and any revisions to property owners and residents of the area within 1,250 feet of where the development is proposed.

~~2~~

~~(a) The Chief of Planning must send notice of the area meeting to all property owners and residents within 1,250 feet of the boundaries of the area described in the application.~~

~~(b)The notice must be sent no less than two (2) weeks prior to the area meeting.~~

~~7. *First Revised Application* – The applicant must file a revised application, based on comments received at the area meeting, in accordance with provisions of Article 5.~~

7~~8~~. *Notice* – The ~~Chief of Planning~~applicant must send notice of the Planning Commission meeting and any ~~revised~~ revisions to the application, if applicable, in accordance with the provisions of Section 25.05.03.c.

(a) The ~~Chief of Planning~~ applicant must send notice to all property owners and residents within 1,250 feet of the boundaries of the area described in the application.

(b) The notice must be sent no less than two (2) weeks prior to the Planning Commission meeting.

8~~9~~. ~~*Preliminary Review;*~~ *Public Hearing* – The Planning Commission must conduct a preliminary review of the first revised application and conduct a public ~~meeting~~ hearing thereon.

~~(b)~~9~~10~~. ~~*Second Revised*~~ *Revision to Application* – The applicant must file a ~~second revised~~ revision to the application, if needed, based on comments from the preliminary review, in accordance with the provision of Article 5.

~~*(b)*~~

10. *Notice* – The ~~Chief of Planning~~applicant must send notice of the Planning Commission meeting and any revised application, if applicable, in accordance with the provisions of Section 25.05.03.c. The notice must be sent

~~(a)The Chief of Planning must send notice~~ to all property owners and residents within 1,250 feet of the boundaries of the area described in the application,~~.~~

~~(b)The notice must be sent~~ no less than two (2) weeks prior to the Planning Commission meeting.

~~2~~

~~(b)~~11~~2~~. *Final Review; Public ~~Meeting~~Hearing* – The Planning Commission must conduct a final review of ~~the second~~any revised application and conduct a public ~~meeting~~ hearing thereon.

12~~3~~. *Conditions of Approval* – Approvals may be subject to any condition that the Planning Commission finds necessary to protect the public health, safety, aesthetics, and welfare of the community and to ensure that the proposed use or development will be consistent with the purpose and intent of this Chapter. The Planning Commission must make the findings in Section 25.07.01.3.

13~~4~~. *Implementation Period* – The approval of a Level Three (3) site plan is subject to the implementation provisions of Section 25.~~04.02.f~~07.06.

14~~5~~. *Notice of Decision* – The Chief of Planning must send notice of the Planning Commission's final review decision in accordance with the provisions of Section 25.05.06.

15. Appeals – Unless otherwise provided, any person aggrieved by any final decision of the Commission may appeal the same to the Circuit Court for the County. Such appeal must be taken according to the Maryland Rules as set forth in Title 7, Chapter 200.

25.07.06. *Site Plan Implementation Period*

a. *Site Plan Approval* - A site plan approval by the Planning Commission or the Chief of Planning expires if construction does not commence pursuant to a validly issued building permit within two (2) years of the Planning Commission approval, unless another time frame is provided by this Chapter or by the terms of the approval.

b. *Extensions* - The Commission or the Chief of Planning may, for good cause shown, grant no more than two (2) extensions of not more than six (6) months each for any prior approval subject to the provisions of Section 25.05.08, "Extension of Implementation Period". The Planning Commission may require as a condition of approval of an extension that the applicant submit six (6) month progress reports to the Chief of Planning detailing efforts undertaken to implement the site plan approval.

c. *Multi-Phase or Multi-Building Site Plan Approval* – All phases of a multi-phase project for which a site plan approval has been approved must be commenced within eight (8) years from the date of the approval letter of the

~~2~~

Planning Commission or the site plan approval will expire. A site plan approval will become void for those buildings within a multiple building development for which construction has not commenced within eight (8) years from the date of the site plan approval letter.

25.07.~~06~~ 07 – Project Plan Review

An application for a site plan review with 13 or more points, as determined in Section 25.07.02.b above, is processed as a project plan review and is subject to the following provisions:

1. *Pre-Application Staff Meeting* – The applicant must hold a meeting with staff of the City's ~~Community Planning and~~ Development Review Committee ~~Services~~ prior to submitting an application to outline the scope of the project and the scope of the Comprehensive Transportation Review. At that meeting, the Chief of Planning will provide the applicant with a non-binding point evaluation for the project, which will be re-evaluated after the application is submitted.

2. *Pre-Application Area Meeting* – The applicant must hold an area meeting prior to submitting an application to outline the scope of the project and receive comments. The applicant must send notice to the City and to property owners and residents within 1,500 feet of the project area no less than two (2) weeks prior to the meeting.

3. *Project Plan Application* – The applicant must file a project plan application in accordance with the provisions of Article 5.

4. *Notice* – The ~~Chief of Planning~~applicant must send notice of ~~the joint Mayor and Council and Planning Commission public meeting and of the application~~ all area meetings, public meetings and public hearings relating to the subject application filing in accordance with the provisions of Section 25.05.03.c.

   (a) The ~~Chief of Planning~~applicant must send notice to all property owners and ~~residents~~ tenants within 1,500 feet of the boundaries of the area described in the application.

   (b) The notice must be sent no less than two (2) weeks prior to the meeting.

5. *Sign* – A sign must be posted in accordance with the provisions of Section 25.05.03.d.

6. ~~*Joint Mayor and Council/Planning Commission Public Notice and Initial Review*~~*Briefing Session for Mayor and Council and Planning Commission* – The Mayor and Council and the Planning Commission must hold ~~a joint~~ public meetings to conduct a~~n initial review~~ briefing of the project plan.

7. *Area Meeting* – The applicant ~~must~~ is encouraged to ~~then~~ hold ~~a neighborhood~~ area meeting(s) to explain and receive comments on the proposed project plan ~~to residents and property owners of the area where the development is proposed~~.

   (a) The ~~Chief of Planning~~ applicant must send notice of the area meeting to all property owners and residents within 1,500 feet of the boundaries of the area described in the application.

   (b) The notice must be sent no less than two (2) weeks prior to the meeting.

8. ~~*Revised*~~ *Revised Project Plan Application* – The applicant is encouraged to revise the application pursuant to comments received at the briefing sessions and area meetings~~*Project Plan Application* – The applicant must file a revised application, based on comments received from the initial review and area meetings, in accordance with the provisions of Article 5~~.

~~9. *Notice* – The Chief of Planning must send notice of the Planning Commission public meeting and any revised application, if applicable, in accordance with the provisions of Section 25.05.03.c.~~

   ~~(a) The Chief of Planning must send notice to all property owners and residents within 1,500 feet of the boundaries of the area described in the application.~~

   ~~(b)The notice must be sent no less than two (2) weeks prior to the Planning Commission meeting.~~

~~10~~9. *Planning Commission Public Meeting* - The Planning Commission must hold a public meeting on the revised application for a project plan.

~~11~~10. *Planning Commission Comments and Recommendation* - At the conclusion of the public meeting, the Planning Commission shall prepare its comments and recommendations to the Mayor and Council.

~~12~~11. ~~*Second Revised*~~ *Revision to Project Plan Application* – The applicant may file a ~~second revised~~ revision to the application, if needed, based on comments received at the Planning Commission meeting, for consideration by the Mayor and Council.

~~2~~

~~13~~12. *Notice* – The ~~Chief of Planning~~applicant must send notice of the Mayor and Council public ~~meeting~~ hearing and any ~~revised~~ revisions to the application, if applicable, in accordance with the provisions of Section 25.05.03.c.

(a) The ~~Chief of Planning~~applicant must send notice to all property owners and residents within 1,500 feet of the boundaries of the area described in the application.

(b) The notice must be sent no less than two (2) weeks prior to the Mayor and Council ~~meeting~~hearing.

~~14~~13. *Mayor and Council Public Hearing* – The Mayor and Council must hold a public hearing on the revised application for a project plan.

~~15~~14. *Area Meeting* – If directed by the Mayor and Council, the applicant must then hold a second area meeting to explain and receive comments on the proposed plan to property owners and ~~residents~~ tenants of the area where the development is proposed.

(a) The ~~Chief of Planning~~applicant must send notice of the area meeting to all property owners and residents within 1,500 feet of the boundaries of the area described in the application.

(b) The notice must be sent no less than two (2) weeks prior to the meeting.

~~16~~15. *Final Project Plan Application* – The applicant ~~must~~ is encouraged to file a ~~final~~ project plan revision ~~application,~~ based on comments received during the public hearing and from the area meeting~~, if any, in accordance with the provisions of Article 5~~.

~~17~~16. *Notice* – The ~~Chief of Planning~~applicant must send notice of the Mayor and Council public ~~meeting~~ hearing and any ~~revised~~ revisions to the application, ~~if applicable,~~ in accordance with the provisions of Section 25.05.03.c. and 25.07.06 (13) above.

(a) The ~~Chief of Planning~~applicant must send notice to all property owners and residents within 1,500 feet of the boundaries of the area described in the application.

(b) The notice must be sent no less than two (2) weeks prior to the Mayor and Council meeting.

~~2~~

17. Findings - The Mayor and Council must make the findings required in Section 25.07.01.3.

18. *Decision; Validity Period* – Upon close of the public hearing record, the Mayor and Council will ~~hold a public meeting and~~ render a final decision ~~-~~on the proposed project plan. If the application is approved, the Mayor and Council will establish a validity period for the project.

19. *Conditions of Approval* – Site plan approvals and project plan approvals may be subject to any condition that the Mayor and Council finds necessary to protect the public health, safety, aesthetics, and welfare of the community and to ensure that the proposed use or development will be consistent with the purpose and intent of this Chapter. ~~and~~

20. *Implementation Period of Approval* – Unless otherwise provided in the approval, a project plan approval expires if a site plan application implementing all or a portion of a project plan is not filed within six (6) months of the date of the Mayor and Council's approval.~~The approval of a project plan by the Mayor and Council is subject to the provisions of Section 25.04.01.b.~~

21. *Notice of Decision* – The Chief of Planning must send notice of the Mayor and Council's decision on the final project plan in accordance with the provisions of Section 25.05.06.

22. *Preliminary Plan of Subdivision Approval* - Approval of a project plan also constitutes approval of a preliminary plan of subdivision.

23. *Subsequent Site Plan Review* – All development approved under a project plan ~~must obtain~~ *is subject to* subsequent site plan approval in accordance with the level two (2) site plan review procedures under Section 25.07.04 above.

24. *Appeals* – Any person aggrieved by any decision of the Mayor and Council made on a map amendment application or a project plan application may appeal the same to the Circuit Court for the County. Such appeal must be taken according to the Maryland Rules as set forth in Title 7, Chapter 200.

25.07.~~07~~ 08 – Review of Applications for Special Exceptions

a. *Pre-Application Staff Meeting* – The applicant must hold a meeting with ~~staff of~~ the City's ~~Community Planning and~~ Development ~~Services~~ Review Committee prior to submitting an application to outline the scope of the project. At that meeting, the Chief of Planning will provide the applicant with a non-binding point

~~2~~

evaluation for the project, which will be re-evaluated after the application is submitted.

b. *Notice of Meetings* – Notice shall be:

1. In accordance with the provisions of Article 5 of this Chapter.

2. The area of notice shall be based on the chart in Section 25.07.02.b ~~above~~.

(a) For applications with zero (0) to six (6) points mailed notice shall be sent to all property owners and residents within 750 feet of the project area.

(b) For applications with seven (7) to nine (9) points mailed notice shall be sent to all property owners and residents within 1,000 feet of the project area.

(c) For applications with 10 to 12 points mailed notice shall be sent to all property owners and residents within 1,250 feet of the project area.

(d) For applications with 13 or more points mailed notice shall be sent to all property owners and residents within 1,500 feet of the project area.

c.– *Pre-Application Area Meeting* – The applicant must hold an -area meeting prior to submitting an application to outline the scope of the project and receive comments. The applicant must send notice of any meeting in accordance with Section 25.07.07.b above. Notice must be sent no less than two (2) weeks prior to the meeting.

d. *Special Exception Application* – The applicant must file an initial Special Exception ~~Application~~ application in accordance with the provisions of Article 25.05.02.

e. *Notice* – The ~~Chief of Planning~~applicant must send notice of the application filing in accordance with the provisions of Sections 25.05.03.c and 27.07.07.b.

f. *Sign* – A sign must be posted in accordance with the provisions of Section 25.05.03.d.

g. *Area Meeting* – The applicant must then hold a neighborhood meeting to explain the ~~proposed~~ special exception application to members of the area where the development is proposed and receive comments.

1. The ~~Chief of Planning~~applicant must send notice of the area meeting in accordance with the provisions of Sections 25.05.03.c and 27.07.07.a.

~~2~~

2. The notice must be sent no less than two (2) weeks prior to the area meeting.

h. ~~*Revised*~~ *Revision of Special Exception Application* – The applicant may file revisions to the application in accordance with the provisions of Article 5 to address comments received at the area meeting.
~~The applicant must file a revised application, based on comments received at the area meeting, in accordance with the provisions of Article 5.~~

i. *Referring Application to the Planning Commission* – Within five (5) days after acceptance of any application under this Section, the Chief of Planning must ~~transmit~~ refer a copy of the application to the Planning Commission for consideration and recommendation to the ~~-~~Board of Appeals~~Board of Appeals may request that the Commission submit a written recommendation on the special exception~~, based on the compliance of the proposed ~~variance~~ special exception with the Plan. If a recommendation is made, it must be placed in the application file by the Clerk of the Commission and become a part of the record on the application. ~~If the Planning Commission considers the special exception, notice of their meeting must be given.~~

j. *Planning Commission Public Notice and Meeting* – The Planning Commission ~~may~~ will hold a public meeting on the revised application for a special exception.

1. The ~~Chief of Planning~~applicant must send notice of the Planning Commission meeting in accordance with the provisions of Sections 25.05.03.c. and 27.07.07.b~~a~~.

2. The notice must be sent no less than two (2) weeks prior to the meeting.

k. *Comments and Recommendations* - At the conclusion of the public meeting, the Planning Commission may prepare its comments and recommendations to the Board of Appeals.

l. *Second* ~~*Detailed*~~ *Revision to the Special Exception Application* – The applicant must file a second ~~revised~~ revision to the application, if needed, based on comments received at any Planning Commission meeting, in accordance with the provisions of Article 5 of this Chapter.

m. *Board of Appeals* ~~*Public*~~ *Notice and Public Hearing* – The Board of Appeals must hold a public hearing on the revised application for a special exception.

1. The ~~Chief of Planning~~applicant must send notice of the ~~area meeting~~ *public hearing* in accordance with the provisions of Sections 25.05.03.c and 27.07.07.b~~a~~.

~~2~~

2. The notice must be sent no less than two (2) weeks prior to the meeting.

n. *Decision* – Upon close of the public hearing record, the Board of Appeals will render a final decision on the proposed special exception.

o. *Conditions of Approval* – Special Exception~~s~~ approvals may be subject to any condition that the Board of Appeals finds necessary to protect the public health, safety, aesthetics, and welfare of the community and to ensure that the proposed use or development ~~with~~ will be consistent with the purpose and intent of this Chapter and the applicable findings in Article 15.

p. *Implementation Period* – The approval of a special exception is subject to the provisions of Section 25.06.04.~~4.03.g.~~

q. *Notice of Decision* – The Chief of Planning must send notice of the Board of Appeals decision on the special exception in accordance with the provisions of Section 25.05.06.

r. *Zoning Map Indication* – The grant of a special exception ~~shall~~ must be noted upon the Zoning Map.

s. *Subsequent Site Plan Review* – All development approved under a special exception ~~must obtain~~is subject to subsequent site plan approval in accordance with the level two (2) site plan review procedures under Section 25.07.04.

25.07.09~~8~~ – Temporary Use Permit

A temporary use permit must be issued prior to the temporary use of a building, other structure, or land allowed ~~by temporary site plan approval in accordance with the level two (2) site plan review procedures under Section 25.07.04 above, and demarked~~ in the ~~individual~~ use charts of Articles 10 through 14. Provisions for issuing the permit are contained in Article 25.09.04.

25.07.10~~09~~ – Sign Permit

Provisions for the issuance of sign permits are contained in Article 18.

25.07.1~~0~~1 – Occupancy Permit

a. *Requirement* – An occupancy permit is required prior to:

1. Occupancy and use of a building hereafter erected or structurally altered; and

~~2~~

2. Occupancy or change in use of unimproved land.

b. *Issuance* – An occupancy permit will only be issued by the Chief of Inspection Services or designee when the Chief of Planning and all other applicable City Department representatives, such as the City Forester and City Engineer, have found that all conditions of all applicable codes have been met.

c. *Appeals* – The grant or denial of an occupancy permit may be appealed to the Board of Appeals.

25.07.12~~1~~ – Temporary Occupancy Permit

a. *When Allowed*

1. The Chief of Inspection Services or designee may issue a temporary occupancy permit upon making the findings contained in subsection b.

2. A temporary occupancy permit may not be issued for a single-unit detached dwelling.

b. *Issuance* – A temporary occupancy permit will be issued if the Chief of Inspection Services or designee finds, upon inspection, that:

1. Peculiar and exceptional difficulties or undue hardship would result if it were not issued;

2. All conditions imposed upon the granting of the development permit have been substantially completed and/or complied with;

3. *When determined to be necessary by the Chief of Inspection Services, ~~A~~a* sufficient bond (totaling 200% of the value of the work to be completed) has been posted;

4. None of the remaining conditions to be complied with are a health or safety hazard; and

5. Granting of the application would not impair the intent or purposes of this Chapter or violate any provision of the Code or other applicable law.

c. *Validity Period of Approval*

~~2~~

1. *Validity Period* – A temporary occupancy permit is valid for a period not to exceed 30 days, in the discretion of the Chief of Inspection Services or designee, and based on the characteristics of each application.

2. *Renewal* – For good cause shown, the Chief of Inspection Services may renew a temporary occupancy permit for additional periods, in accordance with Section 25.05.08, but no temporary occupancy permit, including any renewals, will be valid for more than 60 days.

3. *Obligations of Applicant* – Within the term of any temporary occupancy permit, including any renewals thereof, it will be the obligation of the applicant, whether or not it is the owner of the property, to complete or cause to be completed, all matters and things necessary to the issuance of an occupancy permit.

d. *Appeals* – The grant or denial of a temporary occupancy permit may be appealed to the Board of Appeals.

25.07.13~~2~~ – Certificate of Approval in Historic Districts

a. *Requirement* – A Certificate of Approval issued by the Historic District Commission is required prior to any of the following actions affecting~~to~~ a site or exterior of a building or structure ~~that would affect the historic, archaeological, or architectural significance of the site or the exterior appearance or finish of a structure~~in a Historic District Zone:

1. Construction;

~~(b)~~2. Structural Alteration;

~~4.~~3.Substantial Exterior Alteration~~Reconstruction~~;

~~(d)~~4. ~~Movement~~Relocation; ~~or~~

5. Demolition, or~~.~~

6. Reconstruction

7. Demolition by neglect.

b. *Exceptions* – A Certificate if Approval is not required for exterior paint colors, routine maintenance, normal gardening and landscaping, or driveway repairs. Routine maintenance is defined as repair or replacement of building features with features of the same design and same material.

~~2~~

c. *Procedure* for considering and approving Certificate of Approval

1. Administration Approval – The Chief of Planning is authorized to issue a Certificate of Approval for fence, sign and mature tree removal applications. Such activities must conform to the adopted design guidelines outlined in this section.

2. Historic District Approval – Where administrative approval is not authorized, the Historic District Commission must make a decision on the application which will be considered at a meeting of the Historic District Commission.

(a) Notice of the meeting must be provided in compliance with the provisions of Section 25.05.03.

(b) *Factors* for *Consideration in Reviewing Application* – In reviewing the plans for any such construction or change, the Historic District Commission will give consideration to:

i The effect of the proposed changes on the general character of the designated Historic District, weighing their impacts on the integrity of the structures on the property and the related environmental setting;

(ii) The historic and aesthetic compatibility of the proposed alterations with historically significant structures;

(iii) The following are sources of design review:

A. Senkevitch, Anatole, Jr., "Adopted Architectural Design Guidelines for the Exterior Rehabilitation of Buildings in Rockville's Historic Districts," Adopted 1997;

B. U.S. Secretary of the Interior's Standards and Guidelines for Archaeology and Historic Preservation, as amended; and

C. City of Rockville: Technical Guides for Exterior Alterations, Adopted 2004; and

(iv) Any other factors provided in Article 66B, Chapter 8 of the Maryland Code

d. *Decision; Notification* – Notification of the Commission's decision must be provided in accordance with Section 25.05.06.

e. *Expiration/Implementation Period of Historic District Commission's Approvals*

1. *Expiration* - A Certificate of Approval issued by the Historic District Commission expires under the following circumstances:

(a) *Site Plan Approval Required* - If site plan approval is required to exercise the Certificate of Approval, an application for site plan approval must be filed within six (6) months of the date of the Certificate of Approval or the Certificate of Approval ~~shall~~ expires. ~~The~~ Filing ~~of~~ an application for site plan approval ~~shall~~ extends the Certificate of Approval to a date one (1) year from the date of issuance of the Certificate. The approval of a site plan ~~shall~~ extends the Certificate of Approval for the same period of time that the rights granted by the site plan approval exist, including any extensions thereof; and

(b) *Building or Demolition Permit Required* - Any building permit or demolition permit required to implement a Certificate of Approval must be issued and construction or demolition started within 12 months of the date of the Certificate of Approval, or within the time limit as extended by the approval of a site plan, or the Certificate of Approval ~~shall~~ expires.

2.. *Extension* - The Historic District Commission may, for good cause shown, grant no more than two (2) extensions of not more than six (6) months each for any prior grant of approval subject to the provisions for an extension of Section 25.05.08, "Extension of Implementation Period".

f. *Building Permit* –No building permit may be issued for any exterior change to any property in the Historic District until a Certificate of Approval has been filed with the Chief of Planning.

f. Incorporation *of Maryland Law* – All other provisions and subsequent modifications of Maryland Law, 66B, Chapter 8 are incorporated into this Article by reference.

~~b~~h. ~~*No*~~ *Resubmittal of Denied~~Rejected~~ Applications Prohibited* – The applicant may not resubmit an application for a Certificate of Approval that is identical to a ~~rejected~~ denied application for one (1) year after the denial~~rejection~~.

~~2~~

~~c. *Issuance / Denial* – All applications for Certificates of Approval must be considered and acted upon by the Historic District Commission in accordance with the provisions of State law applicable to such permits.~~

~~d. *Implementation Period of Approval* – The issuance of a Certificate of Approval by the Historic District Commission is subject to the provisions of Section 25.04.04.f.~~

i. *Appeal* – Any aggrieved person may appeal the decision of ~~The grant or denial of a Certificate of Approval may be appealed pursuant to the appeal process for the~~the Historic District Commission ~~as specified~~ in accordance with the provisions of Section 25.04.04.g.

25.07.14~~3~~ – Additional Permits and Approvals

In addition to the permits listed in this Article, land use development may be subject to the requirements of additional permits found in other Chapters of the City Code. It is the responsibility of the applicant to ensure that the development complies with all requirements of the City Code. The following permits may be required for development, but are not limited to this list:

1. Building construction permits in Chapter 5 (Building and Building Regulations);

2. Electrical, Gas, Mechanical, and Plumbing Permits in Chapter 5 (Building and Building Regulations);

3. Fire Protection Permits in Chapter 9 (Fire Safety Code);

4. Tree Removal Permits in Chapter 10.5 (Forest and Tree Preservation);

5. Stormwater Management and Sediment Control Permits in Chapter 19 (Sediment Control and Storm Water Management); and

6. Various ~~Any number of~~ construction permits required for street construction, which may include, but is not limited to, a Public Works permit or a utility permit (see generally, Chapter 21, Streets and Public Improvements).

~~2~~

Article 8 – Transitional Provisions, Nonconformities, Nonconforming Alteration Approval

25.08.01 – Purpose of this Article

It is recognized that the adoption of this Chapter will change the previous zoning policy and regulations in the City and thereby render some existing developments nonconforming. This Article is intended to address development both in the pipeline as of (date of adoption) and existing development that will be considered nonconforming. The provisions of this Article are intended to recognize the interests of property owners in continuing to develop property that has been previously planned and approved and to use property previously built, while promoting the future establishment and reestablishment of structures and uses that comply with current zoning policy and regulations.

25.08.02 - Transitional Provisions

a. *Purpose* – In order to maintain continuity for development approvals filed and processed in good faith under the provisions of ~~the prior ordinance~~this Chapter in effect prior to _____ [effective date], the following provisions are included ~~or~~ in order to provide a process for completing the development review process.

b. *Previously Approved Developments* ~~*Projects*~~ – The following provisions apply to any portion of a previously approved development, except for those planned developments identified in Section 25.14.07 of this Chapter, for which all approvals required for implementation have not been obtained by [effective date]. ~~All development projects except those covered in Article 14, Special Zones, for which any development approval has been granted by an Approving Authority prior to _____ [effective date] may proceed to completion and operate in accordance with the terms of such development approval so long as said approval does not expire.~~

~~c. *Expiration of Development Approval* – Upon the expiration of any development approval granted by an Approving Authority for a development prior to _____ [effective date], or upon the granting of any subsequent superseding permit or other approval, the requirements of this Chapter shall apply to any new application for approval for development.~~

~~d. *Subsequent Approvals* – Notwithstanding subsections (a) and (b) of this Section, the following provisions apply to any portion of a previously approved development project for which a building permit is not obtained by the expiration date of the approval as provided below,~~

1. *Use Permits*~~–~~

~~2~~

(a) Construction under a previously approved use permit must commence within two (2) years from the date of the approval letter of the Planning Commission or Chief of Planning or the use permit will expire. For good cause shown, not more than two (2) extensions not exceeding one (1) year each, may be granted by the original Approving Authority.

2. *Use Permits for Multi-Phase Projects*

(a) All phases of a multi-phase project for which a use permit or detailed application has been approved as of (date of adoption) must be commenced within eight (8) years from the date of the approval letter of the Approving Authority or the use permit will expire. A use permit will become void for those buildings within a multiple building development for which construction has not commenced within eight (8) years from the date of the use permit approval letter.

(b) Any multi-phase project for which a use permit was approved prior to October 25, 1993 that has not commenced construction on all buildings as of _____ must commence construction on all buildings within 8 years from effective date, or the use permit will expire.

(c) Notwithstanding compliance with subsection (a) above, for any development located within the Town Center Performance District or within the Twinbrook Metro Performance District the following will apply:

(i) Where 30 percent or more of the total approved gross floor area has been constructed within eight (8) years from the date of the issuance of the use permit, the use permit becomes void with respect to any building for which construction has not commenced within 12 years from the date of issuance of the use permit.

(ii) Where 60 percent or more of the total approved gross floor area has been constructed within 12 years from the date of the issuance of the use permit, the use permit becomes void with respect to any building for which construction has not commenced within 14 years from the date of issuance of the building permit.

(d) Nothing herein shall affect the validity of a use permit for a building constructed in accordance with the requirements of the use permit prior to the expiration for the time frames set forth herein.

(e) Any application for a use permit or use permit amendment, except where a use permit is required to implement a previously approved special exception, pending as of _____ (effective date), is subject to the provisions of this Chapter.

3~~2~~. *Special Exception*

(a) If a ~~use~~ site plan approval ~~permit~~ is required to implement a special exception, the ~~use permit~~site plan application must be filed within six (6) months from the date of the approval letter of the Board of Appeals or the special exception will expire~~. The approval process for the necessary use permit will follow the process in effect at the time of the special exception approval.~~.

(b) If a building permit but no site plan approval is required for a special exception, the building permit application must be filed within 12 months from the date of the approval letter of the Board of Appeals or the special exception will expire.

(c) If ~~a~~ neither a use permit nor a building permit is required to establish a special exception use, such use must be established within 12 months of the approval letter of the Board of Appeals or the special exception will expire.

(d) Previously approved special exceptions for uses that are permitted or conditional uses under this Chapter may continue to exist as such permitted or conditional use and the special exception approval shall become void; provided that if the previously approved special exception use does not satisfy the current requirements of the applicable zone, such use may continue as a valid special exception subject to all conditions of the special exception approval.

e. Any application for a special exception pending as of _____ (effective date) is subject to the provisions of this Chapter.

4~~3~~. *Variances* – Variances approved but not fully implemented prior to the effective date of this Chapter may continue in full force and effect, provided that the variance is implemented in accordance with Section 25.06.03.

5. Plats – Any Preliminary Subdivision Plan or Final Record Plat pending as of (effective date) is subject to the provisions of this Chapter.

6. Any application for a variance pending as of _____ (effective date) is subject to he provisions of this Chapter.~~4. *Use Permits for Multi-Phase Projects*~~

~~2~~

~~(a) All phases of a multi-phase project for which a use permit or detailed application has been approved as of ___ (date of adoption) must be commenced within eight (8) years from the date of the approval letter of the Approving Authority or the use permit will expire. A use permit will become void for those buildings within a multiple building development for which construction has not commenced within eight (8) years from the date of the use permit approval letter.~~

~~(b) Any multi-phase project for which a use permit was approved prior to October 25, 1993 that has not commenced construction on all buildings as of _____ [effective date] has eight (8) years from _____ [effective date] to commence construction on all buildings or the use permit will expire.~~

~~(c) Nothing herein shall affect the validity of a use permit for a building constructed in accordance with the requirements of the use permit prior to the expiration for the time frames set forth herein.~~

c. *Expiration of Development Approval* – Upon the expiration of any development approval granted by an Approving Authority for a development prior to _____ [effective date], or upon the granting of any subsequent superseding permit or other approval, the requirements of this Chapter shall apply to any new application for approval for development.

~~25.08.03 – Nonconformities, in General~~

~~Any use or development rendered non-conforming by the adoption of this Chapter or any amendment thereto, may continue subject to the limitations provided in this Chapter.~~

25.08.~~04~~ 03 – Qualifying Substandard Lots

Any lot legally recorded by subdivision plat that is at least 40 feet wide is deemed to be a buildable lot even though it may have less than the minimum area required in any current residential zone. Such lots may be developed under the zoning development standards in effect when the lot was recorded except that:

1. A lot created by deed prior to October 1, 1957 that is a minimum of 5,000 square feet in area and at least 40 feet wide may be recorded as a buildable lot;

2. The maximum building height and maximum building coverage for any building or structure must comply with the current standards of the zone in which the lot is classified;

~~2~~

3. The main building setbacks are as follows:

   (a) Front: 25 feet,

   (b) Side: Seven (7) feet; and

   (c) Rear; 20 feet~~; and~~.

4. Construction on such lots must conform to any current established building line.

25.08.~~05~~ 04 – Nonconforming Uses

a. *Limitations on Expansion, Alteration, or Enlargement of Non~~-C~~conforming Uses* – No nonconforming use may be expanded, altered, or enlarged, except as follows:

   1. A nonconforming use may be extended throughout those parts of a building or structure which were specifically designed or constructed for such use prior to _____ [effective date] and which parts were either completed or substantially completed structurally prior to such date; and

   2. Structural alterations of a building or structure, the use of which does not conform to the requirements of this Chapter, may be made only if the alteration is for the purpose of conforming to the use requirements of this Chapter, or to maintain the building or structure in safe repair.

b. *Termination*

   1. The right to continue a nonconforming use terminates if:

      (a) Damage or destruction of the building or structure encompassing the nonconforming use exceeds 50% of the building or structure~~'s structural integrity~~; or

      (b) The nonconforming use is replaced by a permitted, conditional, or special exception use; or

      (c) The use ceases for at least three (3) calendar months. A nonconforming use is not considered to have ceased if:

~~2~~

(i) Approval and execution of modifications or renovations are pursued to continue the use, subject to a validly issued building permit, ~~or~~ occupancy permit, or nonconforming alteration approval; or

(ii) The property is being actively marketed for tenants to continue the use. A sign on the property advertising its availability is not, by itself, evidence of active marketing.

2. Notwithstanding the foregoing, if the property remains vacant for a period of 12 months, the nonconforming use is terminated. The property owner may request a six (6) month extension of the termination from the Planning Commission for good cause shown. Such request must be submitted before the termination date. No more than two (2) such extensions may be granted.

25.08.~~06~~ 05 – Development Standards Nonconformities

a. *Limitations on Expansion, Alteration, or Enlargement of Development Standards Nonconformities* - ~~A development standards nonconformity must not be extended, altered, or expanded, except as follows:~~

1. Except as otherwise noted, i~~I~~f a ~~portion of a~~ building or structure ~~is nonconforming~~contains a development standards non-conformity, then alterations, expansions, and enlargements may be made to the building or structure only if they do not expand or extend the development standards nonconformity.

2. *Exceptions.*

(a.) Alterations, expansions, and enlargements to the portion of the building that contains a development standards nonconformity may be made only for the following reasons:

~~(a)~~i To maintain the building or structure in safe repair;

~~(b)~~ii To improve the façade so as to enhance appearance; or

~~(c)~~iii To comply with the requirements of the Americans with Disabilities Act or other safety code requirements.

~~2.~~(b) Any such alterations must not increase the amount of gross floor area of ~~the~~a building with a development standards nonconformity by more than five percent (5%). ~~The reasonable accommodation of such alterations may create or affect other development standards nonconformities. The coincidental effects resulting from the alteration on~~

~~2~~

~~other development standards nonconformities must not exceed a cumulative total of five percent (5%).~~

~~3.~~Any ~~major~~ structural alterations or ~~major~~ reconstruction of a building or structure that exceeds 50% ~~or more~~ of the gross floor area of the existing building or structure, except for a single unit detached dwelling, must bring the building or structure into compliance with the provisions of this Chapter and eliminate the development standards nonconformities.

(c) Conversion of a carport to a garage does not constitute the expansion of a development nonconformity ~~and therefore does not trigger application of this Section~~.

4.. *Termination of* Development *Standards Nonconformity –*

1. Except for detached single unit dwellings, a development standards nonconformity terminates if more than 50% of the gross floor area of a building, that includes a development standards nonconformity (a) is altered or reconstructed or (b) suffers damage or deterioration by fire, flood, explosion, or any other cause or casualty.

2. ~~b.~~ *Provisions for Single Unit Detached and Semi-detached Dwellings* – If there is a voluntary destruction of 50% or more of the exterior wall~~s~~ surfaces from the grade up, or an expansion of more than 100% of the existing floor area in a single unit dwelling, the development standards non-conforming terminates and the dwelling must be brought into compliance with the provisions of Article 10 and any other applicable provisions of this Chapter.

~~c. *Provisions for Existing Structures or Development in a Residential Medium Density Zone* – Existing structures or development in a Residential Medium Density Zone as of ___ (effective date) must comply with the provisions of Section 25.11.04.d.~~

~~d.*Termination of Development Standards Nonconformity* – Except for detached single unit dwellings, a development non-conformity shall terminate if a building or structure, or portion thereof, that includes a development standards nonconformity suffers damage or deterioration by fire, flood, explosion, or any other cause or casualty that exceeds 50% of the gross floor area of the existing building or structure, and any repair or replacement must bring the building or structure into conformance with the requirements of this Chapter.~~

~~e.~~b. *Historic District Zone Exceptions* – Within a designated Historic District Zone, any building, ~~dwelling~~ structure, or ~~other contributing resource~~ site may be

~~2~~

repaired or replaced in kind in its original location, subject to approval of the Historic District Commission, notwithstanding its ~~the dwelling or resource's~~ failure to comply with any development standard contained in this Chapter. Any renovations or additions beyond the scope of the original structure ~~must comply~~ is subject to ~~with~~ the provisions of this Chapter.

c. *Nonconformity through Public Taking*

1. A building, structure, or site improvement is not a development standards nonconformity if it is located on an otherwise lawful lot and the lot was reduced in area by a taking under eminent domain or by government acquisition in lieu of eminent domain or ~~other government action~~ that would otherwise render the building, structure, or improvement nonconforming because a dimension of the building, structure, or site improvement or the location on the lot is deficient. The building, structure, or site improvement may be repaired, altered, or reconstructed, if it is an otherwise lawful use, only to the extent of original development existing on the date of the governmental ~~action~~acquisition.

2. In the event such property is subject to redevelopment that includes the removal of the principal use or structure on the site, the new development must conform to all provisions of this Chapter.

d.~~g~~. *Nonconforming Alteration Approvals* – Any proposed alteration, expansion, or enlargement ~~-~~to a development standards nonconformity under ~~this Section~~Section 25.08.05.a. must comply with the nonconforming alteration permit requirements set forth in Section 25.08.07.

e.~~h~~.*Sidewalk Modifications* - Sidewalks on private property that do not meet the standards set forth in Section 25.17.05 are not nonconforming and may be repaired or replaced in kind. If the property is subject to development or redevelopment, then all sidewalks ~~should comply with~~are subject to the guidelines set forth in Section 25.17.05~~6~~.

25.08.06 – Certain Existing Structures or Development

a. Any existing structure or development that no longer conforms to the development standards of the zone in which it is located, but does conform to the development standards and requirements in effect immediately prior to _____ [effective date] is considered to be conforming for purposes of reconstruction subject to the following.

~~2~~

~~b.~~1. In the event the structure or development is damaged or destroyed by fire, flood, explosion, or orther cause or casualty outside the control of the property owner, the structure or development may be reconstructed to the density and configuration which existed immediately prior to the damage or destruction. An additional five percent (5%) of gross floor area may be built provided that it does not create, extend, or enlarge any development nonconforming.

2. If a structure is demolished, or a redevelopment of a site occurs, due to causes within the control of the property owner, all reconstruction and redevelopment must comply with the development standards and requirements of the zone in which the property is located.

b. Any expansion, alteration or enlargement to the portion of the structure or building that no longer conforms to the development standards of the zone in which it s located is subject to the provisions of Section 25.08.05.a. and Section 25.08.07.

~~c.~~c. If extensions or additions to such an existing structure or development culmulatively exceed 50% of the existing gross floor area, the entire structure or development must comply with all of the then current development standards contained in this Chapter.

25.08.07 – Nonconforming Alteration Approval

a. *Requirement*

1. *Chief of Planning Review* – Nonconforming alteration approvals by the Chief of Planning are required in order to maintain nonconforming zoning entitlements for the following:

(a) Expansion of a nonconforming use to those parts of a building that were specifically designed or arranged for such use prior to the date when such use of a building became nonconforming; or

(b) The modification of any nonconformity on a Single Dwelling Unit Residential Zone lot. ~~and/or~~

2. *Planning Commission Review* – Nonconforming alteration approvals by the Planning Commission are required to maintain nonconforming zoning entitlements for the following:

(a) Expansion, modification, or structural alteration of a structure or premises occupied by a nonconforming use, and/or

~~2~~

(b) A change to a nonconforming structure in compliance with the requirements of this Article that involves a physical change to the exterior part of the structure that is nonconforming.

b. *Application* -

~~1.~~ Applications for nonconforming alteration approvals must be submitted to the Chief of Planning and must contain the following~~and processed in accordance with the provisions of Article 5, including but not limited to, amendments, notice of decisions, and appeals of decisions.~~

~~2. Applications for nonconforming alteration approvals must include all information specified by the Approving Authority, but must include at least the following~~:

1. ~~(a)~~ A site plan drawn to scale showing locations of all existing and proposed buildings, yards, driveways, and parking areas and the proposed alteration; ~~and~~

2. ~~(b)~~ Floor plans showing the location of uses in the structures and on the site: and

3. Such other information as may be required by the Approving Authority.~~.~~

c. *Public Notification of Pending Application* – The Chief of Planning must send written notification of the application filing ~~subject~~ in accordance with ~~to~~ the provisions of Section 25.05.03.c.

d. *Procedure*

1. *Chief of Planning Review. Non conforming alterations requiring the Chief of Planning review must be submitted and processed as a Level 1. Site Plan Review pursuant to Article 7 of this Chapter.*

(a) *Public Notification of Pending Application* – A sign must be posted on the property that is the subject of the application and written notice provided by the applicant in accordance with the requirements in Sections 25.05.03.c. and d.

~~(b) *Public Hearing* – The Chief of Planning must hold a public meeting on each application if an objection to the application is raised within 30 days of the notice being sent.~~

~~2~~

~~(i) *Notice* – Written notice must be provided by the Chief of Planning in accordance with the provisions of Section 25.05.03.c.~~

~~(ii) *Meeting Procedure* – The meeting shall be conducted in accordance with the provisions of Section 25.06.06.e.3.~~

(b~~e~~) *Action on Application*

(i) Within 3~~6~~0 days of sending the notice of the application~~, if no objection is raised, or within 30 days of the conclusion of the public meeting,~~ the Chief of Planning must decide to:

A. Approve the application,

B. Approve the application with conditions as may be necessary to ensure compliance with the intent and purposes of this Chapter~~subject to specific conditions~~, or

C. Deny the application.

(ii) The Chief of Planning may issue a nonconformity alteration approval only if the findings set forth in subsection 25.08.07d.2.(b)(i) - (vi), below, are made.

(iii) The Chief of Planning's decision must be based on written findings of fact~~ and may impose such conditions or restrictions upon the premises benefited by a nonconformity alteration approval as may be necessary to comply with the intent and purposes of this Chapter~~.

2. *Planning Commission Review* – Nonconforming Alteration applications requiring Planning Commission review according to 25.08.07.a.2 must be submitted and processed as a Level 2 Site Plan Review pursuant to Article 7 of this Chapter.

(a) *Public Notice and Hearing* – The Planning Commission must hold a public hearing on an application for a nonconforming alteration approval. The ~~Chief of Planning~~applicant must provide notice of the public hearing in accordance with the provisions of Section 25.05.03.c. and d.

(b) ~~*Issuance*~~ *Decision* – The Planning Commission may issue a nonconforming alteration approval only if all of the following findings are~~can be~~ made:

~~2~~

(i) Plans that document the nonconforming zoning entitlement being requested are on file with the City to document the existence and extent of requested nonconforming zoning entitlement.

(ii) The existing ~~nonconforming use and/or structure~~nonconformity has not resulted in a notable negative impact or nuisance to the surrounding properties and zone (i.e. excessive parking demand, traffic, noise, view obstruction, etc).

(iii) The proposed nonconforming ~~nonconforming use or structure~~ alteration is compatible with the general character of the surrounding neighborhood or zone.

(iv) ~~If the application is for~~ The expansion, of the nonconformity~~a nonconforming use, the nonconforming use~~ will not have negative impacts on the public health, safety, aesthetics, and welfare of the nearby properties.

(v) The requested action will be consistent with the purpose and intent of the zone.

(vi) ~~If a nonconforming structure is involved, the applicant has reduced the nonconformities to an extent reasonably practicable.~~

~~(vii)~~ For nonconforming alteration approvals that trigger conformance with current parking requirements pursuant to Article 16, the Planning Commission may waive the current parking requirement and allow the maintenance of the existing nonconforming parking entitlements through the grant of the nonconformity alteration approval, if the Commission finds that:

A. It is not practicable to provide the required parking onsite in a manner that preserves neighborhood character;

~~B. The provision of the required parking would be in conflict with the replication of the structure; and~~

~~C~~B. Preserving the nonconforming parking entitlements is the best solution to provide consistency with the goals, policies, and intent of the ~~Master~~ Plan.

e. *Conditions of Approval* – ~~Approvals~~The approval of a nonconforming alteration may be subject to any condition that the applicable Approving Authority finds

~~2~~

necessary to ~~protect the public health, safety, aesthetics, and welfare of the community~~ satisfy the required findings and to ensure that the proposed nonconforming alteration ~~use or development~~ will be consistent with the purpose and intent of this Chapter.

~~f. *Validity Period of Approval* – The nonconformity alteration approval will become effective on the date of the notification of decision in accordance with Section 25.05.06 and remain in effect in accordance with the terms of the decision.~~

~~g~~f. *Appeals* – ~~The grant~~ Any person aggrieved by the approval or denial of a nonconformity alteration approval may be appealed as follows:

1. Decisions by the Chief of Planning may be appealed to the Planning Commission ~~in accordance with the procedures of~~ as provided in Section 25.04.06.c.

2. Decisions by the Planning Commission may be appealed to the Circuit Court as provided in Section 25.04.02.g.

~~2~~

Article 9 – Accessory Uses; Accessory Buildings and Structures; Encroachments; Temporary Uses; Home-Based Business Enterprises; Wireless Communication Facilities

25.09.01 –General Requirements

Accessory uses and structures must:

1. Be customarily associated with and clearly incidental and subordinate to a legally established principal use or structure in accordance with all requirements of this Chapter;

2. Be operated and/or maintained under the same ownership as the principal use or structure;

3. Be on the same lot as the principal use or structure, unless otherwise provided in this chapter; and

4. Not create a nuisance or hazard to surrounding properties or passing vehicles or pedestrians.

25.09.02 – Accessory Uses

~~a.~~ *General Requirements* – In addition to the general requirements for accessory uses in 25.09.01, above, accessory uses must:

~~1.Not include structures or structural features inconsistent with the permitted, conditional or special exception use;~~

1. Not include residential occupancy in any zone~~or retail sales~~; and

2. ~~Not have a gross floor area in excess of the provisions for accessory buildings set forth below, if operated partially or entirely in detached structures~~Not include retail sales in any residential dwelling.

3. ~~b.~~ If operated partially or entirely within the structure containing the permitted, conditional, or special exception use, the gross floor area within such structure utilized by accessory uses (except garages and off-street loading facilities) is not greater than:

   (a) Twenty percent (20%) of the gross floor area, but not to exceed 300 square feet of the gross floor area, of a dwelling unit~~;~~ or

(b) ~~2.~~ Ten percent (10%) of the gross floor area of a structure containing any permitted, conditional, or special exception use other than a dwelling unit.

25.09.03 – Accessory Buildings and Structures

a. *Residential Accessory Buildings and Structures*

1. Residential accessory buildings and structures are subject to the following development standards:

Development Standards for Residential Accessory Buildings and Structures						
Zone	**Minimum Setback Requirements**				**Maximum Rear Yard Coverage**	**Maximum Height Not to Exceed[1] ~~Feet~~**
	Front	**Side**		**Rear**		
		Side - Street Abutting	**Land Abutting**			
R-400	All accessory buildings must be located in the rear yard except as provided in Sec. 25.09.05	30’	3’	3’	15%	15’
R-200		25’	3’	3’	25%	15’
R-150		30’	3’	3’	15%	15’
R-90		20’	3’	3’	25%	15’
R-75		20’	3’	3’	25%	15’
R-60		20’	3’	3’	25%	15’
R-60 (Qualifying Undersized Lot)		20’	3’	3’	25%	15’
R-40		20’	3’	3’	25%	15’

[1]The height of an accessory building or structure is measured from the finished grade at the front of the building to the highest point of the roof.

2. Residential accessory buildings ~~and structures~~ are subject to the following additional provisions:

(a) *Accessory Buildings and Structuures Greater than 12’ High* - Accessory buildings and structures that exceed 12 feet in height must be set back from all lot lines an additional two (2) feet for each additional foot of building height up to the maximum allowable height of 15 feet.

(b) *Gross Floor Area* - The gross floor area of ~~such~~ any detached accessory ~~structures~~ building must not exceed ten percent (10%) of the minimum lot

area in the R-40 and R-60 Zones, . The gross floor area must not exceed nine percent (9%) of the minimum lot area in the R-75 Zone, and eight percent (8%) of the minimum lot area in the R-90 Zone. No simgle accessory building can have a gross floor area greater than 500 square feet.

(c) In no event can accessory structures collectively occupy more than 25% of the rear yard.

(c)*Previously Built Accessory Structures* - Accessory structures that were constructed under the standards in effect at the time they were erected are considered conforming.

(d) *Historic Accessory Buildings* - Historic accessory buildings, located in a legally designated Historic District Zone are exempt from the calculation of rear yard coverage.

(e) *Accessory Buildings on Through Lots* - A through lot has no rear yard as defined in this Chapter. However, accessory buildings may be placed in the apparent rear yard, but must be set back from the street line at least the minimum front yard setback required in the zone. Within the area between the main building and the setback line, all of the requirements for accessory buildings, including setbacks, heights, and maximum lot coverage will apply.

(f) *Accessory Buildings on Corner Lots* – Accessory buildings may be placed in the rear yard of a corner lot. The rear yard of a corner lot must meet the rear yard setback.

(g) *Small, Open Accessory Structures* - Small open structures, such as gazebos, may be permitted with a ten foot (10') setback in a yard abutting a street.

b. *Non-Residential Accessory Buildings and Structures* – Nonresidential accessory buildings and structures are reviewed as part of the site plan review and subject to all requirements of the relevant zone and all conditions of the site plan approval.

25.09.04 – Temporary Uses

a. *Permit Required* – A temporary use permit must be issued prior to the use of a building, other structure, or land allowed by temporary approval and demarked in the individual use charts of Articles 10 through 14. Temporary uses do not include uses that are regulated by Chapter 12, *Licenses, Permits, and Miscellaneous Business Regulations*, of this Code, such as hawkers and peddlers.

b. *Issuance* – A temporary use permit may be issued if the Chief of Inspection Services or designee finds that the use proposed in the application will not:

1. Adversely affect the health or safety of persons residing or working in the neighborhood of the proposed use;

2. Be detrimental to the public welfare or injurious to property or improvements in the neighborhood; and/or

3. Constitute a violation of any provision of this Code or other applicable law.

c. *Appeals* – The grant or denial of a temporary use permit may be appealed by an aggrieved party to the Planning Commission.

d. *Special Requirements for Temporary Uses* –The temporary uses described below are subject to the following requirements:

1. *Temporary Buildings, Trailers, Portable Storage Units, or Yard for Construction Materials and Temporary Offices for the Sale or Rental of Real Property* – Temporary buildings, trailers, portable storage units, or yard for construction materials or equipment, both incidental and necessary to construction in the immediate area, and temporary offices incidental to and necessary for the sale or rental of real property in the immediate area may operate for as long as there is a valid building permit but must cease operation no later than the issuance of the last required occupancy permit. If such temporary uses are included in a valid building permit, no temporary use permit is required. Portable storage units may also be used on property improved with single unit detached, attached, or townhouse dwellings for the short-term storage of items, including but not limited to, clothing, equipment, goods, household or office fixtures or furnishings, materials, and merchandise, for a period not to exceed 30 days, which period may, for good cause shown, be extended for not more than an additional 60 days. A temporary use permit is not required for a portable storage unit used on residential property for moving or other short term purposes for 5 days or less.

2. *Christmas Tree Sales* – Christmas tree sales are permitted only between the fourth Friday in November and December 25.

3. *Garden Produce, House Plants, and Cut Flower Sales* – Sale of garden produce, house plants, and cut flowers may operate with a temporary use permit only during the months of May through October~~, and for not more than three (3) calendar months, which shall not be renewed for more than two (2) successive periods at the same location.~~

.

4. *Carnivals, Festivals, Flea Markets* – Carnivals, festivals, and flea markets must comply with the license provisions of Chapter 12, *Licenses, Permits, and Miscellaneous Business Regulations,* of the Code.

5. *Mobile Uses* – Mobile uses which travel to residential or non-residential zones to provide services are subject to the Hawkers and Peddlers provisions set forth in Chapter 12, *Licenses, Permits, and Miscellaneous Business Regulations,* of the Code.

e. *Validity Period of Approval* – The validity period of approval for each temporary use permit is set forth in subsection d. above.

25.09.05 – Setback Encroachments

The following setback encroachments apply within all zones, except as otherwise provided herein:

1. *Permanent Encroachments* – The following permanent structures and features are permitted to project into the required yard setbacks in the amount stated for each structure or feature:

(a) *Air Conditioners and Heat Pumps* – Air conditioners and heat pumps may project no more than five (5) feet into minimum side and rear setbacks.

(b) *Renewable Energy Generation Systems - Solar heating panels, solar collectors, or other alternative energy generator equipment may project not more than five (5) feet into the minimum side and rear setbacks.*

(c~~b~~) *Architectural Elements* – Cornices, eaves, and gutters may project not more than:

(i) Three (3) feet into front and side yard setback; and

(ii) Five (5) feet into rear yard setback.

(d~~c~~) *Bay Windows, Vestibules, or Balconies* – Bay windows, vestibules, and balconies, ten feet (10’) or less in width, may project not more than three feet (3’) into front and rear yard setback.

(e~~d~~) *Belt Courses, Sills, and Lintels* – Belt courses, sills, and lintels may project not more than six inches (6”) into front, rear, and side yard setback.

(fe)*Canopies* – Canopies may encroach into applicable setbacks in all zones except single unit detached dwelling, detached and semi-detached unit residential zones, subject to the following limitations:

(i) Nonpermanent canopies, not more than ten feet (10') wide, may encroach up to any front lot line; and

(ii) Permanent canopy structures, not more than 40 feet wide, may encroach up to 40 feet into front setback areas except where the front setback requirement is less than 50 feet, then such canopy may encroach up to ten feet (10') from any front lot line.

(gf)*Chimneys* – Chimneys not more than six feet (6') in width may project not more than 18 inches into a front, side, or rear yard setback.

(hg) *Porches, Steps, and Stoops in Single Dwelling Unit Residential Zones* – Porches, steps, and stoops in Single Dwelling Unit Residential Zones are subject to the following limitations:

(i) Uncovered steps, stoops, and porches may extend into the front or rear yard setback not more than 12 feet and not more than nine (9) feet into the rear yard setback.

(ii) Covered unenclosed steps, stoops, and porches may extend into the front yard setback not more than 12 feet.

(iii) Porches, steps, and stoops may extend not more than four (4) feet (4') into the side yard setback if such steps, stoops, or porches are not more than eight feet (8') wide. Such entryways may be covered, but not enclosed.

(ih)*Setback From Unimproved Rights-of-Way* – If an unimproved rights-of-way have has remained unimproved for at least 20 years following the date of recordation of the plat or deed, and is not programmed for improvement in the current City Capital Improvements Program, the following regulations apply:

(i) *Setbacks for Buildings* – If the unimproved right-of-way abuts one (1) side of a lot, then the side yard setback requirement in the zone applies in lieu of the front yard setback requirement. If the unimproved right-of way is approximately parallel to the improved street providing the primary access to the main dwelling, then the setback from the unimproved right-of-way is equivalent to the rear yard setback in the applicable zone in lieu of the front yard setback requirement.

(ii) *Setbacks for Accessory Buildings and Structures* – The setback requirements for accessory buildings and structures for side and rear lot lines are as set forth in Section 25.09.03.

2. *Fences ~~and Hedges~~*

(a) *Fences ~~and Hedges~~ – Residential Zones* – Fences ~~and hedges~~ are subject to the following limitations in residential zones:

(i) *Dangerous Fences Prohibited* - Fences ~~and hedges~~ on residential properties must comply with the provisions of Chapter 5, *Buildings and Building Regulations* of this Code regarding fences.

(ii) *Development Standards*

A. *Side and Rear Yards* – A fence ~~or hedge~~ not exceeding eight feet (8') in height is permitted in the side or rear yard of any lot.

B. *Front Yard* – A fence ~~or hedge~~ not exceeding ~~48~~ four (4) ~~inches~~ feet in height is permitted in the front yard.

(iii) *Corner and Through Lots*

A. On a corner lot or through lot, the yards lying between the principal building and the streets are deemed front yards, and no fence ~~or hedge~~ exceeding ~~48 inches~~four (4) feet in height can be erected in this area.

B Notwithstanding Section 25.09.05.2.(a)(ii)B., above, where the street abutting is classified as an arterial highway or greater, a fence ~~or hedge~~ not exceeding six feet (6') in height is permitted in the front yard.

C. On a corner lot in a residential zone, a fence ~~or hedge~~ must not exceed ~~48 inches~~four (4) feet above the curb level for a distance of 25 feet from the intersection of the street lines. Retaining walls made necessary by changes in street grade, width, or alignment are not subject to the limitations set forth in the preceding sentence.

(iv) *Fences Adjacent to Unimproved Right-of-Way* – Fences ~~or hedges~~ along ~~the~~ an unimproved right-of-way must not exceed six feet (6') in height and must otherwise comply with the provisions for fences ~~and hedges~~ as set forth in Article 9. If the right-of-way is subsequently

improved, any fence ~~or hedge~~ exceeding four feet (4') in height is deemed nonconforming and may be maintained and repaired. If replaced, the fence ~~or hedge~~ must comply with the provisions of this Section.

(b) *Fences ~~and Wall Hedge~~ – Nonresidential Zones*

(i) *Dangerous Fences Prohibited* – Fences on nonresidential properties must comply with the provisions of Chapter 5, *Buildings and Building Regulations*, of this Code regarding fences.

(ii) *~~Dimensional~~ Development Standards*

A. A fence ~~or wall hedge~~ not exceeding eight (8) feet ~~(8')~~ in height is permitted in the side or rear yard of any lot.

B. A fence not exceeding four (4) feet in height is permitted in the front yard of any lot.

C~~B~~. The Planning Commission may allow a fence ~~or hedge~~ up to eight feet (8') in height in the front yard ~~with~~in an Industrial Zone ~~in the course~~as part of a ~~of~~ site plan review in accordance with the provisions of Article 7.

(c) *Public School Property.* A fence not exceeding six (6) feet in height is permitted in the front yard of any public school property.

3. *Temporary Encroachments* – Structures and structural features to assist persons with disabilities required to meet the provisions of the Americans with Disabilities Act (ADA) are permitted to project into the required yard setbacks for each structure or feature. This encroachment is permitted only so long as it is needed to accommodate a person with disabilities and the right to such encroachment does not run with the land.

4. Encroachments into setbacks that otherwise meet the standards as set out in this section 25.09.05 must be designed so as not to interfere with pedestrian or bicycle access or flow, or be a danger to pedestrians or bicyclists ~~if a bicycle facility is accessible nearby, or if access to a bikeway is not contra-indicated~~.

25.09.06 – Height Encroachments

a. *Height Exemptions* - The following non-habitable, architectural elements of a structure may exceed the height limitations prescribed for the zone in which the structure is located, subject to the restrictions of subsection b. below:

1. Rooftop structures;

2. Parapet walls;

3. Belfries;

4. Chimneys;

5. Flagpoles;

6. Flues;

7. Monuments;

8. Radio and television towers (subject to the wireless provisions contained in Section 25.09.08.b);

9. Antennae or aerials (subject to the wireless provision contained in Section 25.09.08.b);

10. Spires;

11. Water towers and tanks;

12. Heating, ventilation units, air conditioning units (HVAC), and similar mechanical equipment;

13. Solar heating panels, solar collectors, or ~~other~~ renewable alternative energy generation~~or~~ equipment; and

14. Elevator equipment and other mechanical equipment.

b. *Restrictions* - The height exemptions provided in Section 25.09.06.a above, are subject to the following restrictions:

1. Architectural elements exempted from the height computation:

(a) Must have a total area less than 25% of the roof area;

(b) Must only be used for a use incidental to the main use of the building;

(c) Must be less than 19 feet in height as measured from the finished roof elevation; and

(d) Must be setback from the edge of the roof by a minimum of a 1:1 setback to height ratio.

2. Notwithstanding the forgoing, parapet walls must not exceed six feet (6') in height as measured from the finished roof elevation.

3. Rooftop mechanical equipment must be screened from view by an enclosure no taller than 19 feet in height as measured from the finished roof elevation.

(a) Rooftop mechanical equipment and their enclosures must be set back from the edge of the roof by a minimum of a 1:1 setback to height ratio.

(b) Rooftop enclosures must be designed to be compatible, using, as closely as possible, the materials, color and style of the building. The Chief of Planning ~~or designee~~ must determine the degree to which the proposed enclosure adheres to the overall design character of the entire building.

(c) Where the rooftop equipment includes renewable energy generation equipment, rooftop screening must be designed to allow operation of such equipment, which may mean reducing height of screening.

c. *Waiver*

1. The Planning Commission may permit a waiver from any or all of the restrictions set forth in subsections b.1 through b.3 of this section upon finding that the size, scale, and dimensions of any non-habitable architectural structure listed above are:

(a) Architecturally compatible with both the building on which it is to be erected and the adjacent buildings; and

(b) Not contrary to the intent and purpose of the Plan or this Chapter.

2. In granting any such waiver, the Planning Commission may impose such conditions as may be reasonable and necessary so that the non-habitable architectural structures are consistent with the Plan, including, but not limited to, the screening of rooftop structures and the shadow regulations set forth in Section 25.17.06.

3. Notification shall be provided pursuant to Section 25.05.03 of this Chapter.

25.09.07 – Home-Based Business Enterprise

a. *General Provisions* – The following requirements apply to all types of home-based business enterprises:

1. *Area of Use* –~~–~~Except as otherwise provided t~~T~~he home-based business enterprise must be conducted entirely within the dwelling unit ~~or an existing accessory building~~ and must not use any open yard area of the lot or parcel on which the dwelling unit is located or any building constructed on the lot or parcel specifically for the purpose of operating the home occupation. It may, however, involve off-site activities such as sales, client contact, and other matters related to the home-based business enterprise.

2. *Use of Accessory Building* –An accessory building may be utilized for a home-based business enterprise only if the property is located within a Historic District Zone and within a Planned Developmen tZone.

~~2.*Prohibition of Nuisance* – A home-based business enterprise must not:~~

~~(a) Use any equipment or process that creates a nuisance such as noise (in accordance with Chapter 31B of the Montgomery County Code, as amended), vibration, glare, fumes, odors, or electrical or electronic interference detectable at or beyond the lot line of a detached dwelling unit or the floor, ceiling, or party wall of an attached dwelling unit; or~~

3. *Prohibition of Nuisance* – A home-based business enterprise must not:

(a) Use any equipment or process that creates a nuisance such as noise (in violation of Chapter 31B of the Montgomery County Code, as amended), vibration, glare, fumes, odors, or electrical or electronic interference detectable at or beyond the lot line of a detached dwelling unit or the floor, ceiling, or party wall of an attached dwelling unit; or

(b) Involve the use, storage, or disposal of any hazardous material, except for disposal of medical waste regulated by Maryland State laws and regulations.

(c) *Exterior Appearance* – If an accessory building to a principle building is used for any part of a home-based business enterprise, there must be no external evidence of such use. The floor area of an accessory building used in connection with the home-based business enterprise is not included in the total floor area allowed for the use in the principal building.

4. Prohibition of Truck Deliveries – No truck deliveries are permitted, except for parcels delivered by public or private parcel services that customarily make residential deliveries.

~~(b) Involve the use, storage, or disposal of any hazardous material, except for disposal of medical waste regulated by Maryland State laws and regulations.~~

~~3. Prohibition of Truck Deliveries – No truck deliveries are permitted, except for parcels delivered by public or private parcel services that customarily make residential deliveries.~~

5. ~~4~~ Subordinate and Incidental Use - The use must be subordinate and incidental to the main dwelling and the use of that dwelling for residential purposes and cannot occupy more than 49~~%~~ percent of the gross floor area of the main dwelling. A home-based business enterprise is not deemed to be an accessory use.

~~5. Exterior Appearance – If an accessory building to a principle building is used for any part of the home-based business enterprise, there must be no external evidence of such use and no external modifications that detract from the residential appearance of the dwelling unit. The floor area of an accessory building used in connection with the home-based business enterprise is not included in the total floor area allowed for the use in the principal building.~~

6. Signs – The display of a sign must comply with the requirements established in Article 18 of this Chapter.

~~5.~~7. Variance Prohibition - No variance may be granted to accommodate a home- based business enterprise.

8. Residence Requirement. A home based business enterprise must be conducted by 1 or more persons who reside in the dwelling at least 220 days in each calendar year.

9. Other Licensing – ~~The use~~A home based business enterprise must meet all other licensing requirements that may apply.

b. *No-Impact Home-Based Business Enterprises* – No-impact home-based business enterprises are limited to no more than ten (10) visits per week in connection with the home-based business enterprise. ~~subject to the following provisions:~~

~~1. *Visits to the Site* - No more than ten (10) visits per week to the site are allowed in connection with the home-based business enterprise.~~

~~2. *Employees* - The no-impact home-based business enterprise must be conducted only by individuals residing in the dwelling unit.~~

~~3. *Sale of Goods* – No sale of goods other than those produced on the premises is allowed.~~

~~4. *Display or Storage of Goods* – Display or storage of goods is limited to merchandise that may be ordered by customers to whom it will be delivered at off-site locations, or merchandise awaiting such delivery.~~

~~5. *Equipment or Facilities* – No equipment or facilities may be used in connection with the home-based enterprise other than:~~

~~(a) Domestic or household equipment;~~

~~(b) Small office equipment;~~

~~(c) Equipment or facilities reasonably related to the production of handmade products or services provided by the home-based business enterprise; and~~

~~(d)Equipment and supplies associated with personal or professional services.~~

~~c.~~c. *Minor Home-Based Business Enterprises* – Minor home-based business enterprises are subject to the following provisions:

~~1.~~1. *Registration* – A minor impact home-based business enterprise must be registered with the Chief of Planning.

(a) ~~2.~~ Application – The applicant must submit an application which includes the following information:

~~(a)~~ The manner in which the operation of the home-based business enterprise complies with the requirements of a minor home-based business enterprise;

i

~~(i)~~ii ~~(b)~~ The location of the property by street address and either lot and block number or liber and folio;

~~(iii)~~iii ~~(c)~~ The zone in which the property is located;

~~(iv)~~iv ~~(d)~~ The location and number of off-street parking spaces;

~~(v)~~v ~~(e)~~ The hours of operation; and

~~(vi)~~vi ~~(f)~~ Other pertinent information required by the Chief of Planning.

~~(b)~~(b) ~~3.~~ *Affidavit* - The applicant must submit a signed affidavit affirming that:

i ~~(a)~~ The applicant resides at least 220 days in each calendar year in the dwelling unit in question;

~~(ii)~~ii ~~(b)~~ The applicant agrees to comply with the requirements of this Section 25.09.07; and

~~(iii)~~iii ~~(c)~~ The applicant agrees to take whatever action is required by the Chief of Planning to bring the home-based business enterprise into compliance if complaints of noncompliance are received and verified.

(c). ~~4.~~ *Approval of Application* – If the Chief of Planning determines that the completed affidavit and certification complies with the applicable Sections of this Chapter, the Chief of Planning will:

~~(i~~a~~)~~ Issue a Certificate of Registration; and

~~(ii~~b~~)~~ Record the certificate in the home-based business enterprise Registry.

2~~5~~. *Limitation on Number of Occupations* – If more than one (1) home-based business enterprise is operated in the dwelling, the cumulative impact cannot be any more than if only a single home-based business enterprise were operated in the dwelling.

3~~6~~. *Employees* – The minor home-based business enterprise must be conducted only by individuals residing in the dwelling unit *and no more than one (1) nonresident employee.*

4~~7~~. *Visits to Site*

(a) A maximum of 20 visits per week, and no more than five (5) visits per day including deliveries, is allowed in connection with minor home-based business enterprises on one (1) lot or parcel.

(b) Only one (1) motor vehicle of a patron, client, or any other non-resident visiting a minor home-based business enterprise may be parked at one (1) time on a lot or parcel where a minor home-based business enterprise is conducted.

5~~8~~. ~~*Sale of Goods* – No sale of goods other than those produced on the premises is allowed.~~

Sale and Production of Goods and Services – The following activities are permitted in a minor home-based business enterprise:

(a) *The sale of goods, excluding hazardous items;*

(b) *The production of handmade products; and/or*

(c) *Services including but not limited to tailoring, massage, cosmetology, tutoring, music lessons, and professional services which are provided on site by a resident of the dwelling.*

6.~~9.~~ *Display or Storage of Goods* – Display or storage of goods is limited to merchandise that may be ordered by customers to whom it will be delivered at off-site locations, or merchandise awaiting such delivery.

7~~10~~. *Equipment or Facilities* – No equipment or facilities may be used in connection with the home-based enterprise other than:

(a) Domestic or household equipment;

(b) ~~Small o~~Office equipment;

(c) Other equipment facilities that are reasonably related to the production of handmade products or services provided by the home-based business enterprise; and

(d) Equipment and supplies associated with personal or professional services.

8~~11~~. *Neighborhood Impact* – A minor home-based business enterprise must have no readily discernable ~~significant~~ impact on the surrounding neighborhood~~ and must be subordinate to the residential use of the dwelling unit in which it occurs~~.

c.~~d~~. *Major Home-Based Business Enterprises* – Home-based business enterprises that do not satisfy the requirements of a no-impact or minor home-based business enterprise are deemed to be ~~-~~major home-based business enterprises and are permitted as special exception uses if they satisfy all of the applicable requirements of Article 15 of this Chapter.

d~~e~~. *Inspections*

1. All minor and major home-based business enterprises are subject to inspection by the Chief of Planning during business hours.

2. A major home-based business enterprise requires an inspection of the site prior to the approval of the special exception.

3. If the Chief of Planning receives a complaint of a possible violation of a ~~registered~~ home-based business enterprise or otherwise has reason to believe there is a violation, an inspector from the City must inspect the property and determine, within 90 days after receipt of the complaint, whether there is a violation of the provisions of this Section, or of any condition of special exception approval.

4. If the Chief of Planning determines that there is no violation, the operator of the home-based business enterprise and the complainant must be so notified in writing.

5. If the Chief of Planning is denied access to the site to conduct the inspection such denial is a violation of this Article and the City may seek judicial authorization to conduct the inspection.

6. If the Chief of Planning determines there is a violation of Section, 25.15.02.h, enforcement measures may be initiated in accordance with Article 19 of this Chapter.

e~~f~~. *Maintaining the Home-Based Business Enterprise Registry*

1. It is the responsibility of the Chief of Planning to maintain the home-based business enterprise registry.

2. The home-based business enterprise registry must be readily available for public inspection.

f~~g.~~. *Existing Home Occupations* - A home-~~based business enterprise~~occupation in existence as of [date of adoption] is considered a conforming ~~use~~home based business enterprise if it complies with the provisions of the Zoning Ordinance for a home occupation in effect immediately prior to [date of adoption].

1. If there is any change in the character of the existing home~~-based business enterprise~~ occupation, all applicable provisions of this Section 25.09.07 will apply.

2. At such time as the home occupation ceases to operate for one year, or if the ownership of the property changes, all applicable provisions of this Section 25.09.07 will apply.

25.09.08 – Wireless Communication Facility

a. *Purpose* – The purpose of this Section is to provide a uniform and comprehensive set of standards for the development and installation of wireless communication facilities, related structures, and equipment.

1. The regulations and requirements contained herein are intended to:

(a) Regulate the placement, construction, and modification of wireless communication facilities in order to protect the health, safety, and welfare of the public and the aesthetic quality of the City; and

(b) Encourage managed development of wireless communication infrastructure, while at the same time not unreasonably interfering with the development of the competitive wireless communication marketplace in the City.

2. This section is intended to promote the following objectives:

(a) To minimize the total number of wireless communication facilities and antenna support structures throughout the community through siting standards;

(b) To provide for the appropriate location and development of wireless communication facilities and related structures and equipment within the City, and, to the extent possible, minimize potential adverse impacts on the community;

(c) To minimize adverse visual impacts of wireless communication facilities and related structures and equipment through careful design, siting, landscape screening, and innovative camouflaging techniques, such as stealth technology, and utilizing current and future technologies;

(d) To promote and encourage shared use/collocation of antenna support structures;

(e) To maintain and preserve the existing residential character of the City and its neighborhoods and promote the creation of a convenient, attractive, and harmonious community;

(f) To promote the safety of citizens and avoid the risk of damage to adjacent properties by ensuring that wireless communication facilities and related structures and equipment are properly designed, constructed, located, modified, maintained, and removed;

(g) To ensure that wireless communication facilities and related structures and equipment are compatible with surrounding land uses;

(h) To encourage: the location of antennas on existing buildings or other structures; collocation of new antennas on existing antenna support structures; camouflaged antenna support structures; and construction of antenna support structures with the ability to locate three (3) or more providers or users; and

(i) To maintain and ensure that a non-discriminatory, competitive, and broad range of high quality wireless communication services and high quality wireless communication infrastructure consistent with laws are available to the community.

b. *Wireless Communication Facilities Attached to Existing Structures* – Wireless communication facilities attached to the roof or side of a building, or attached to an existing structure must comply with the following:

1. The building or other structure on which a wireless communication facility to be installed must be at least 35 feet in height if used for nonresidential purposes and 50 feet in height if used for multiple unit dwelling purposes. In a mixed-use development, the multiple unit dwelling standard applies. Except as provided in Section 25.09.08.e, wireless communication facilities are not permitted on any single unit detached dwelling or appurtenant accessory building or structure.

2. The antennas and antenna support structures must be located and designed to minimize visual impacts through various methods, including, but not limited to, the use of stealth technology. Antennas and antenna support structures must be installed according to the order of preference in subsections 25.09.08b.2.(a) through (d) below, with (a) being the preferred option. Use of a lower preference location is permitted only if an applicant provides detailed justification as to why higher preference locations are not suitable.

(a) Antennas must be flush mounted on existing structures, or on either rooftop enclosures or the side of a building, and closely match the color and architectural treatment of the structure, enclosure, or building.

(b) Antennas must be flush-mounted on expanded rooftop mechanical equipment enclosures, with the enclosures and antennas designed to be consistent with the architectural treatment and color of the building.

(c) Antennas must be enclosed with screening that is consistent with the architectural treatment and color of the building or structure.

(d) Antennas and support structures must be painted or otherwise treated to minimize their visibility.

3. Antennas and supporting structures are permitted to exceed the height of the building or structure to which they are attached by a maximum of 19 feet. The height above a building must be measured from the finished roof elevation, and not from the roof of any equipment enclosure.

4. Antennas must comply with the following size standards:

(a) Whip antennas must be no more than seven inches (7”) in diameter; and

(b) Panel antennas must be no more than two feet (2’) wide and six feet (6’) long.

5. An equipment building or cabinet may be located on the roof of a building provided it and all other roof structures do not occupy, in the aggregate, more than 25% of the roof area.

6. When an antenna is located on a stadium light or utility pole, the total height of the antenna plus the pole or light must not exceed 125% of the average height of the lighting system at the stadium or run of poles within 500 feet of the pole on which the antenna is located.

c. *Wireless Communication Facilities Located on Ground-Mounted Antenna Support Structures*

1. *Scope* – This subsection applies to wireless communication facilities mounted on free-standing antenna structures.

(a) *Special Exception* – Wireless communication facilities covered by this Section require the approval of a special exception in accordance with the applicable provisions of Article 15 of this Chapter.

(b) *Additional Findings Required* – The following additional findings must be made for the granting of a special exception:

(i) The location selected is necessary for the public convenience and service and cannot be supplied with equivalent public convenience on a building or structure or collocated on an existing antenna support structure; and

(ii) For new antenna support structures to be located in a residential zone or within 500 feet of a residential zone, it must be demonstrated that a good faith effort has been made to locate the proposed antenna support structure in a nonresidential zone more than 500 feet from the residential zone, with adequate coverage and on an isolated site with minimal visual impact.

(c) *Independent Consultant* - The City may hire an independent consultant to review evidence submitted by the applicant, and the applicant must reimburse the City for the reasonable cost of hiring and utilizing such a consultant.

2. *Development Standards*

(a) The maximum height of the facility, including antenna and other attachments, is 50 feet in a residential zone, or within 500 feet of a residential zone, and 199 feet in all other locations. Height must be measured vertically from the pre-disturbance ground level at the center of the support structure.

(b) Monopoles are the preferred type of freestanding antenna support structure.

(c) No commercial or promotional signs, banners, or similar devices or materials are permitted on antenna support structures.

(d) The ground-mounted antenna support structure must be located and designed in a manner that is harmonious with surrounding properties, to the extent practicable. Antenna support structures must be designed to blend into the surrounding environment through the use of color and camouflaging architectural treatment. When practicable, available stealth structure design techniques must be used.

(e) Wireless communication facilities must be located on City-owned property, if feasible.

(f) Antenna support structures must be set back one foot (1') for every foot of height of the structure, measured from the base of the structure to each adjoining property line or right of way.

(g) Lights are not permitted on antenna support structures unless they are required for aircraft warnings or other safety reasons, or to comply with applicable laws and regulations. If required, minimum lighting requirements must be applied, and strobe lights must be avoided unless specified by the Federal Aviation Administration or the Federal Communications Commission.

(h) Outdoor storage of equipment or items related to the wireless communication facility is prohibited on sites with antenna support structures.

(i) All antenna support structures erected as part of a wireless communication facility must be designed to accommodate collocation of additional wireless communication carriers. New antenna support structures of a height of 150 feet or more must be designed to accommodate collocation of a minimum of four (4) additional providers either upon initial construction or through future modification to the antenna support structure. Antenna support structures of less than 150 feet must be designed to accommodate collocation of a minimum of two (2) additional providers.

(j) Prior to construction, each applicant must provide certification from a registered structural engineer that the structure will meet pertinent design, construction, installation, and operation standards, including but not limited to the applicable standards of the Electronics Industries Association (EIA), the Telecommunications Industry Association (TIA), ANSI, and the BOCA Code in effect at the time of the building permit application.

(k) Upon completion of any sale or sublease of an antenna support structure, the owner of an antenna support structure must provide written notice to the City's Inspection Services Division.

(l) The owner of a ground-mounted antenna support structure, at the owner's expense, must remove antenna support structures when a wireless communication facility is not used for wireless purposes for a period 180 days in a 12-month period. The owner of a ground-mounted antenna support structure must immediately notify the City, in writing, of nonuse or abandonment of the structure upon its cessation as a wireless communication facility. Failure to remove an abandoned or unused ground-mounted antenna support structure will result in removal of the structure by the City at the expense of the owner.

(m) When a ground-mounted antenna support structure is removed by an owner, said owner must apply for a demolition permit to remove the tower. A condition of the demolition permit is to restore the site to the standards required by the building code in effect at the time, at no expense to the City.

d. *Equipment Enclosures Located at Ground Level Standards* – Equipment enclosures located at ground level must comply with the following standards:

1. Each enclosure that contains the equipment of a single provider must not exceed 560 square feet of gross floor area and 12 feet in height; if more than one (1) provider is to be accommodated in an enclosure, a single enclosure must be constructed to accommodate the maximum number of providers that are required to collocate on the antenna support structure, up to a maximum of 1,500 square feet in area and 12 feet in height.

2. The enclosure must conform to the applicable setback standards for main structures in the zone in which the property is located; setback standards for accessory buildings and structures in Section 25.09.03 are not applicable to equipment enclosures.

3. The enclosure must be screened to provide year-round screening. This standard may be met by one (1) or a combination of the following: fencing, walls, landscaping, structures or topography which will block the view of the equipment shelter as much as practicable from any street and/or adjacent properties. In areas of high visibility, fencing may be wrought iron, masonry, or other decorative fencing material.

4. Lighting associated with equipment structures must be directed so as to minimize any negative impact of such lighting on adjacent properties.

5. When constructed as a freestanding building, the design of the enclosure must be coordinated with the design of the existing main building on the same lot or, if there is no building on the lot, with the buildings on an adjoining lot, to the extent practicable. In addition, the enclosure must be constructed of non-reflective materials.

6. When attached to an existing building, the enclosure must be designed in a manner that is harmonious with the existing building and surrounding properties.

7. The equipment enclosure must be removed at the cost of the owner when the wireless communication facility is no longer being used by a wireless

communication provider. Failure to remove abandoned equipment will result in removal by the City at the expense of the owner.

e. *Waivers Permitted*

1. *Regulated Satellite Earth Station Antennas*

(a) Any person or entity seeking to install or erect a satellite earth station antenna subject to this Section, other than an antenna specified in subsection 25.09.08.e.1.(a)(ii) below, may apply for a waiver from one (1) or more of the provisions of this Section pursuant to this subsection 25.09.08.e.1, and the Board of Appeals may grant such a waiver pursuant to applicable procedures and standards if it is shown that:

(i) The provision(s) of Section 25.09.08 at issue materially limit or inhibit the transmission or reception of satellite signals at the waiver applicant's property or the provision(s) at issue impose more than a minimal cost on the waiver applicant; and

(ii) The waiver, if granted, would not result in any noncompliance with applicable laws, regulations, and codes (including, but not limited to, safety and building codes); and

(iii) The waiver sought is the minimum waiver necessary to permit the reception or transmission of satellite signals at the waiver applicant's property.

(b) The Board of Appeals is authorized to grant a complete or partial waiver to any provision of Section 25.09.08. In addition, the Board of Appeals may impose a lesser requirement instead of granting a complete waiver of any provision in this Section if a complete waiver is not necessary to permit reception or transmission of amateur service communications at the waiver applicant's property, and the lesser requirement will allow the reception or transmission of satellite signals. The Board of Approval shall not condition a waiver upon an applicant's expenditure of a sum of money, including costs required to screen, pole-mount, or otherwise specially install a satellite earth station antenna, over and above the aggregate purchase or total lease cost of the equipment as normally installed, if such sum would be greater that the aggregate purchase or total lease cost of the equipment as normally installed.

2. *Wireless Communication Facilities for Amateur Service Communications*

(a) Any person or entity seeking to install or erect a wireless communication facility in the City for the purpose of engaging in amateur radio communications may apply for a waiver from one (1) or more of the provisions of this Section pursuant to this subsection 25.09.08.e.2 and the Board of Appeals may grant such a waiver pursuant to applicable procedures and standards if it is shown that:

(i) The provision(s) of Section 25.09.08 at issue preclude amateur service communications, do not reasonably accommodate amateur service communications at the waiver applicant's property or do not constitute the minimum practicable regulation to accomplish the City's health, safety, and welfare objectives; and

(ii) The waiver, if granted, would not result in any noncompliance with applicable laws, regulations and codes (including, but not limited to, FCC regulations concerning amateur radio transmission and reception); and

(iii) The waiver sought is the minimum waiver necessary to reasonably accommodate amateur service communications at the waiver applicant's property.

(b) The Board of Appeals is authorized to grant a complete or partial waiver to any provision of Section 25.09.08. In addition, the Board of Appeals may impose a lesser requirement instead of granting a complete waiver of any provision in this Section if a complete waiver is not necessary to permit reception or transmission of amateur service communications at the waiver applicant's property, and the lesser requirement:

(i) Will not preclude amateur service communications; and

(ii) Is the minimum practicable regulation to accomplish the City's health, safety, and aesthetic objectives.

(c) In determining whether to grant a complete or partial waiver of any provision in Section 25.09.08 or to impose a lesser requirement, the Board must reasonably accommodate amateur radio communications.

3. *All Other Wireless Communication Facilities*

(a) The Board of Appeals is authorized to grant a waiver from any and all of the standards of this Section 25.09.08, except for the height restrictions for a freestanding antenna support structure in subsection c. of this Section, upon showing that compliance with this Section would impose an undue

hardship or prohibit or have the effect of prohibiting the provision of wireless communication services or would result in unreasonable discrimination among providers of functionally equivalent wireless communication services.

(b) Waiver requests from the height restrictions (subsection 25.09.08.c.2) for a freestanding antenna support structure may be granted by the Mayor and Council upon showing that compliance with this Section would impose an undue hardship or prohibit or have the effect of prohibiting the provision of wireless communication services or would result in unreasonable discrimination among providers of functionally equivalent wireless communication services. When requesting a height waiver under this provision, the applicant must submit evidence to the Mayor and Council that the height requested for the freestanding antenna support structure is the minimum height necessary to provide adequate coverage for the area that is being served by the structure. The Mayor and Council, in reviewing any waiver request from this Section, must also consider the impact that the increased height of the antenna support structure would have on properties in the area surrounding the proposed structure, including, but not limited to, the visibility of the structure from residences and proposed methods of mitigating the visibility of the structure.

(c) This subsection 25.09.08.e.3 does not apply to antennas and wireless communication facilities specified in subsections 25.09.08.e.1 and 2.

4. *Procedures for All Waivers*

(a) Unless the Mayor and Council adopt by resolution different procedures for processing waivers from the height restrictions contained in subsection 25.09.08.e.3, all waivers of this Section must be processed in accordance with the procedures applicable to variances contained in Section 25.06.03 of this Chapter.

(b) A waiver applicant must provide supporting evidence and all information requested by the City. The City may hire an independent consultant to review such evidence, and the applicant must reimburse the City for the reasonable cost of hiring and utilizing such a consultant.

Article 10 –Single Dwelling Unit Residential Zones

25.10.01 – Purpose

The purpose of the Single Dwelling Unit Residential Zones is to:

1. Provide appropriately located areas for residential development that are consistent with the Plan and public health and safety;

2. Consistent with the *Environmental Guidelines*, ensure adequate light, air, privacy, and open space for each dwelling;

3. Protect residents from adverse environmental effects;

4. Promote a suitable environment for residential living through the provision of recreational, religious, and educational facilities as basic elements of a balanced neighborhood;

5. Stabilize and protect the essential characteristics of existing residential development; and

6. Foster development compatible with the topography and other natural characteristics of the area.

25.10.02 - Zones Established

The individual Single Dwelling Unit Residential Zones include the following:

Type of Zone	Distinguishing Feature	Name of Zone
Residential – Single unit dwellings (detached and semi-detached)	40,000 square feet minimum lot area	Residential Estate Zone ("R-400")
	20,000 square feet minimum lot area	Suburban Residential ("R-200")
	15,000 square feet minimum lot area	Low Density Residential ("R-150")
	9,000 square feet minimum lot area	Single unit Detached Dwelling, Restricted Residential ("R-90")
	7,500 square feet minimum lot area.	Single unit Detached Dwelling, Residential ("R-75")
	6,000 (or 5,000) square feet minimum lot area	Single unit Detached Dwelling, Residential ("R-60")

	4,000 square feet minimum lot area	Single unit Semi-detached Dwelling, Residential ("R-40")
NOTES: 1. Provisions for Medium Density Residential Zones are contained in Article 11. 2. Provisions for development in Planned Development areas are contained in Article 14.		

25.10.03 – Land Use Tables

a. The uses permitted in the Single Dwelling Unit Residential Zones are shown in the table below.

b. Uses are subject to applicable conditions of site plan approval.

c. All special exceptions are subject to the requirements of Article 15.

d.– Except as otherwise provided, no more than one (1) single unit detached dwelling may be built on a recorded lot.

e. Key: P = Permitted Use; S = Special Exception; C = Conditional Use; N = Not Permitted

	Uses	Zones							Conditional requirements or related regulations
		Residential Estate Zone (R-400)	Suburban Residential Zone (R-200)	Low Density Residential Zone (R-150)	Single Unit Detached Dwelling, Restricted Residential Zone (R-90)	Single Unit Detached Dwelling, Residential Zone (R-75)	Single Unit Detached Dwelling, Residential Zone (R-60)	Single Unit Semi-detached Dwelling, Residential Zone (R-40)	
a. Residential uses	Dwelling, single unit detached	P	P	P	P	P	P	C	Conditional use subject to the requirements of the R-60 Zone
	Dwelling, two-unit detached (duplex)	N	N	N	N	N	N	P	
	Accessory apartment	S	S	S	S	S	S	N	See. Sec. 25.15.02.a
b. Swimming pools: ~~,~~ ~~n~~Non-		S	S	S	S	S	S	N	See. Sec. 25.15.02.p

	Uses	Zones							Conditional requirements or related regulations
		Residential Estate Zone (R-400)	Suburban Residential Zone (R-200)	Low Density Residential Zone (R-150)	Single Unit Detached Dwelling, Restricted Residential Zone (R-90)	Single Unit Detached Dwelling, Residential Zone (R-75)	Single Unit Detached Dwelling, Residential Zone (R-60)	Single Unit Semi-detached Dwelling, Residential Zone (R-40)	
accessory									
Swimming pools, accessory		P	P	P	P	P	P	P	
c. Home-based business enterprises	No impact	P	P	P	P	P	P	P	See Sec. 25.09.07b
	Minor	P	P	P	P	P	P	P	See Sec. 25.09.07c
	Major	S	S	S	S	S	S	S	See Sec. 25.09.07d; See Sec. 25.15.02.h
d. Institutional uses	Educational institution, private	S	S	S	S	S	S	S	See Sec. 25.15.02.g
	Nursing home	S	S	S	S	S	S	S	See Hospitals and Nursing Homes, Sec. 25.15.02.i
Institutional uses (con't):	Child care home	P	P	P	P	P	P	P	
	Child care center:								Special exception subject to the requirements of Sec. 25.15.02.f
	9 – 12 children	P	P	S	S	S	S	S	
	More than 12 children	S	S	S	S	S	S	S	
	Adult day care	S	S	S	S	S	S	S	
	Charitable or philanthropic institution	S	S	S	S	S	S	S	See. Sec. 25.15.02.e
	Group home:								
	Small	P	P	P	P	P	P	P	
	Large	S	S	S	S	S	S	S	
	Hospital	S	S	S	S	S	S	S	See 25.15.02.i
	Housing for senior adults and persons with disabilities	S	S	S	S	S	S	S	See. Sec. 25.15.02.j

	Uses	Zones							Conditional requirements or related regulations
		Residential Estate Zone (R-400)	Suburban Residential Zone (R-200)	Low Density Residential Zone (R-150)	Single Unit Detached Dwelling, Restricted Residential Zone (R-90)	Single Unit Detached Dwelling, Residential Zone (R-75)	Single Unit Detached Dwelling, Residential Zone (R-60)	Single Unit Semi-detached Dwelling, Residential Zone (R-40)	
	Life Care Facility	S	S	S	S	S	S	S	See. Sec. 25.15.02.k
	Place of worship	P	P	P	P	P	P	P	Use subject to site plan review under Art. 7; see also Sec. 25.16.03.d
	Private club	S	N	N	N	N	N	N	
	Public utility building and structure	S	S	S	S	S	S	S	See Sec. 25.15.02.n
	Publicly-owned or publicly-operated building and use, excluding sanitary landfill	C	C	C	C	C	C	C	Conditional use subject to a Level 3 Site Plan Review (Sec. 25.07.05)
	Veterinary office and animal hospital	S	S	N	N	N	N	N	See. Sec. 25.15.02.r
e. Miscellaneous uses	Bed and Breakfast lodging	S	S	S	S	S	S	N	See. Sec. 25.15.02.d
Miscellaneous uses (con't):	Wireless communication facility entirely within an existing building or on the roof or side of a building, or attached to an existing structure	C	C	C	C	C	C	C	Conditional use subject to the requirements of Sec. 25.09.08

	Uses	Zones							Conditional requirements or related regulations
		Residential Estate Zone (R-400)	Suburban Residential Zone (R-200)	Low Density Residential Zone (R-150)	Single Unit Detached Dwelling, Restricted Residential Zone (R-90)	Single Unit Detached Dwelling, Residential Zone (R-75)	Single Unit Detached Dwelling, Residential Zone (R-60)	Single Unit Semi-detached Dwelling, Residential Zone (R-40)	
	Wireless communication facility not entirely within an existing building or on the roof or side of a building, or attached to an existing structure, including, but not limited to, antennas on a freestanding ground mounted antenna support structure	S	S	S	S	S	S	S	Subject to the requirements of Secs. 25.09.08, and 25.15.02.s
g. Temporary uses:	Temporary building or yard for construction materials or equipment	C	C	C	C	C	C	C	Conditional use subject to the requirements of Sec. 25.09.04
	Temporary office or model home	C	C	C	C	C	C	C	
	Portable Storage Units	C	C	C	C	C	C	C	
	Christmas tree sale	C	C	C	C	C	C	C	
	Garden produce	C	C	C	C	C	C	C	
Temporary uses (con't)	Temporary carnival	C	C	C	C	C	C	C	Conditional use subject to the requirements of Sec. 25.09.04
g. ~~Accessories~~A		P	P	P	P	P	P	P	See. Secs. 25.09.01, 02.

	Uses	Zones							Conditional requirements or related regulations	
		Residential Estate Zone (R-400)	Suburban Residential Zone (R-200)	Low Density Residential Zone (R-150)	Single Unit Detached Dwelling, Restricted Residential Zone (R-90)	Single Unit Detached Dwelling, Residential Zone (R-75)	Single Unit Detached Dwelling, Residential Zone (R-60)	Single Unit Semi-detached Dwelling, Residential Zone (R-40)		
ccessory Uses										

25.10.04 – Prohibition on the Creation of New Pipe Stem Lots

No new pipe stem lots may be created in any Single Dwelling Unit Residential Zone.

25.10.05 –Development Standards

a. *Table of Development Standards*

Minimum Lot Dimensions			Building Envelope Requirements						Lot Coverage			
			Minimum Setbacks									
			Front		Side		Rear					
Area	Width at Front Setback Line	Width at Front Lot Line	Standard	Where established setback exceeds standard (See. Sec. 25.10.05.e.2)	Where street abuts	Where land abuts		Max. Height	Max. Lot Coverage (All main and accessory buildings) (See Sec. 25.10.05.b)	Maximum Impervious Surface in Front Yard[1]	~~Minimum Pervious Area-Total Lot Area[1]~~	Additional
40,000 sq ft	150’	N/A	50’	Est. setback up to 100’	30’	20’	50’	40’	15%	10%		
20,000 sq ft.	100’	N/A	35’	Est. setback up to 100’	25’	13’	35’	40’[2]	25%	20%		
15,000 sq ft	90’	N/A	35’	Est. setback up to 60’	30’	13’	30’	40’	25%	25%		
9,000 sq ft	80’	N/A	30’	Est. setback up to 60’	20’	11’	25’	35’	25%	30%		See. Sec. 2 limitations height and flo in R-60, R-75
7,500 sq ft	70’	40’	25’	Est. setback up to 50’	20’	9’	20’	35’	35%	35%	~~25%~~	
6,000 sq ft	60’	35’	25’	Est. setback up to 50’	20’	8’	20’	35’	35%	40%		
5,000 sq ft	50’	35’	25’	Est. setback up to 50’	20’	7’	20’	35’	35%	40%		See. Sec.
4,000 sq. ft.	40’		25’	Est. setback up to 50’	25’	10’	20’	35’	40%	45%		Single uni dwellings: R-6 lieu of R-4
6,000 sq ft	60’	35’	25’	Est. setback up to 50’	20’	8’	20’	25’	1,500 square feet	40%	~~60%~~	See Sec.

[1] All main buildings, driveways, drive aprons, accessory buildings, decks, patios, swimming pools, and structures with a floor or roof are considered impervious. Internal sidewalks up to four feet (4’) wide, landscaping materials, play equipment, and other decorative structures are excluded from the impervious surface requirement.

[2] In the case of an institution of higher learning located on a site greater than 75 acres, the maximum building height is 75 feet where the use adjoins property in a single dwelling unit residential zone or a Park Zone, building height cannot penetrate a layback slope formed by an angle of 30 degrees measured from the property boundary of the adjoining residential or Park Zone.

b. *Maximum Lot Coverage*

1. *Inclusion of Accessory Buildings* - Maximum lot coverage includes accessory buildings; however, historic structures, located in a ~~legally designated~~ Historic District Zone, are exempt from the calculation of rear yard coverage.

2. *Special Provision in the R-200 Zone*- In the R-200 Zone, the maximum lot coverage is 25%, except as provided for in 25.15.02.j and 25.15.02.k for housing for senior adults and persons with disabilities and life care facilities.

c. *Impervious Surface Limits for Corner Lots and Through Lots*

1. *Corner Lots* – On corner lots, the maximum impervious surface limits for the front yard are one-half (1/2) the percentage requirements shown in the development standards table in Section 25.10.05.a above.

2. *Through Lots* – On through lots, the maximum impervious surface limits for the two (2) front yards are calculated as follows: Each front yard is defined as the area along the full width of the lot and the depth of the minimum front yard setback required in the zone. Each front yard must not exceed the maximum impervious surface limits shown in the development standards table in Section 25.10.05.a above.

d. *Exclusions from Impervious Surface Requirements* – Institutional uses in the Single Dwelling Unit Residential Zones must normally meet the requirements set forth in Section 25.10.05.a, above for the maximum impervious surface area in a front yard~~and minimum pervious surface requirements~~. However, through site plan review in accordance with the provisions of Article 7, the Approving Authority may waive this requirement if it finds that such a waiver will reduce impacts of paved areas on adjoining residential uses, provide more efficient on-site traffic circulation, or address practical difficulties.

e. *Setbacks*

1. *Side Setbacks Where Street Abuts* – A street along a side lot is deemed to be a side street only if the lot abutting the rear of the subject lot does not front on the street, otherwise the front setback requirement must apply.

2. *Front Setback Where Established Setback Exceeds the Standard Setback* – In cases where more than half of the lots located on one (1) side of a street between two (2) intersecting streets are occupied by buildings having a front setback different from the normal specified, any building hereafter must conform to the setback line up to the maximum specified in the development standards table in 25.10.05.a above.

3. *Minimum Setbacks* – A 50 foot setback is required from a right-of-way of limited access and a major or arterial highway unless the lot or lots are shown on an approved preliminary subdivision plan or an approved final record plat prior to January 1, 1980.

25.10.06 – Additional Neighborhood Districts

Historic District and Neighborhood Conservation District regulations are contained in Article 14 and the boundaries of such districts are shown on the zoning map.

25.10.07 – Accessory Uses and Structures

All accessory uses and structures within the Single Dwelling Unit Residential Zones must comply with the provisions of Article 9 of this Chapter.

25.10.08 – Moderately Priced Dwelling Units

Any development that includes residential units must comply with the Moderate Price Dwelling Unit requirements of Chapter 13.5 of the Code.

25.10.09~~8~~ – Special Regulations for Floor Area Ratios and Building Height in the R-60, R-75, and R-90 Zones.

~~a.*General FAR Requirement* - All residential dwellings in the R-60, R-75, and R-90 Zones shall not exceed a floor area ratio (FAR) of 0.35, or up to 3,000 square feet of gross floor area, whichever is greater. Basements are included in the FAR calculation; cellars are not.~~

~~b.*Level Two (2) Site Plan Review Exception* - The Planning Commission may allow a FAR up to 0.5 under a level two (2) site plan review as set forth in Article 7. In considering the proposed increased FAR, the Planning Commission must make the following findings:~~

~~1.The architectural design must be compatible with the existing adjoining and confronting residential dwellings; and~~

~~2.The side setbacks must be sufficient so as to not have an adverse impact on adjoining dwellings due to building height, lack of fenestration, or excessive wall length.~~

~~c.~~a. *Height Limitation* - The height of residential dwellings in the R-60, R-75, and R-90 Zones is limited to ~~32~~ 35 feet, measured at the mid-point of the front of the

building from the surface of the pre-existing grade to the peak of a gable, hip, or mansard roof or to the roof surface of a flat roof.

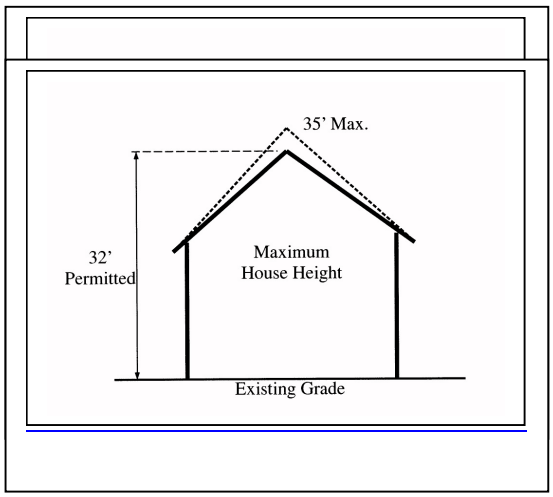

In cases where the existing grade of the lot slopes below the street grade, building height will be measured from the finished street grade, provided that construction of the dwelling requires regrading of the lot for purposes of positive drainage of wastewater and stormwater to the street.

~~d.~~b.*Height Increase*

The Planning Commission may allow an increase in height up to 40 feet under a level two (2) site plan review as set forth in Article 7. In considering the additional height, the Planning Commission must make the findings set forth in subsection 1 above, and the following additional findings:

1. The additional height must be justified by the architectural design;

2. The extra height must not have an adverse impact on light and air on the adjoining properties;

3. The masting and siting of the building must be compatible with other dwellings along the same block;

~~7.The Chief of Planning may allow an increase in building height of up to three (3) additional feet under a level one (1) site plan review as set forth in Article 7. In considering the additional height, the Chief of Planning must make the following findings:~~

~~(a)The additional height must be justified by the architectural design;~~

~~(b)The extra height must not have an adverse impact on light and air on the adjoining properties; and~~

~~(c)The extra height must be compatible with other dwellings along the same block.~~

~~8.The Planning Commission may allow an increase in height up to 40 feet under a level two (2) site plan review as set forth in Article 7. In considering the additional height, the Planning Commission must make the findings set forth in subsection 1 above, and the following additional findings:~~

~~(a)The additional height is necessary for the accommodation of alternative energy generation installations;~~

~~(b)The additional height is necessary to achieve solar access to the dwelling; and~~

~~(c)The dwelling is constructed for significant energy efficiency.~~

~~e~~c. *Dwellings within Historic District Zones* – For residential dwellings within an Historic District Zone, the ~~FAR and~~ height limit increases allowed by this Section may be approved by the Historic District Commission in connection with the granting of a Certificate of Approval pursuant to Section 25.14.01.e.

25.10.10~~.09~~ – Nonconformities

All nonconforming uses and structures within the Single Dwelling Unit Residential Zones must comply with the provisions of Article 8 of this Chapter.

25.10.~~1~~11~~0~~ – Parking and Loading Requirements

All parking and loading within the Single Dwelling Unit Residential Zones must comply with the provisions of Article 16 of this Chapter.

25.10.1~~1~~2 – Landscaping and Buffer Requirements

All landscaping and buffering within the Single Dwelling Unit Residential Zones must comply with the provisions of Article 17 of this Chapter and, where applicable, the Forest and Tree Preservation Ordinance.

25.10.1~~2~~3 – Signs

All signs within the Single Dwelling Unit Residential Zones must comply with the provisions of Article 18 of this Chapter.

Article 11 – Residential Medium Density Zones

25.11.01 – Purpose

The purpose of the Residential Medium Density Zones is to provide locations where semi-detached and attached single unit and multiple-unit dwellings are suitable in order to provide for a variety of housing types within the City. Such uses may be located in the various Residential Medium Density Zones where recommended as suitable in the relevant Master Plan.

25.11.02 –Zones Established

Type of Zone	Distinguishing Feature	Name of Zone
Residential single unit (detached, semi-detached, and attached)	20,000 square feet minimum tract area; Allows single-unit detached, semi-detached, and townhouses up to 10 d.u./ac.	Residential Medium Density ("RMD-10")
Residential single unit and multiple unit dwellings	1-acre minimum tract area; Allows detached, attached, and multi-unit residential dwellings up to 15 d.u./ac.	Residential Medium Density ("RMD-15")
Residential single unit and multiple unit dwellings	2-acre minimum tract area; Allows detached, attached, and multi-unit residential dwellings up to 25 d.u./ac.	Residential Medium Density ("RMD-25")

25.11.03 – Land Use Tables

a. The uses permitted in the Residential Medium Density Zones are shown in the table below.

b. Uses are subject to applicable conditions of site plan approval.

c. All special exceptions are subject to the requirements of Article 15.

d. Key: P = Permitted Use; S = Special Exception; C = Conditional Use; N = Not Permitted

	Uses	Zones			Conditional requirements or related regulations
		Residential Medium Density RMD-10	Residential Medium Density RMD-15	Residential Medium Density RMD-25	
a. Residential uses	Dwelling, single unit detached	P	C	C	Conditional use subject to the development standards of the R-60 Zone

	Uses	Zones			Conditional requirements or related regulations
		Residential Medium Density RMD-10	Residential Medium Density RMD-15	Residential Medium Density RMD-25	
Residential uses (con't)	Dwelling, semi-detached (duplex)	P	P	P	
	Dwelling, attached	N	P	P	
	Townhouse	P	P	P	
	Multi-unit dwelling	N	P	P	
b. Swimming pool, accessory		P	P	P	
c. Home-based business enterprise	No impact	P	P	P	
	Minor	P	P	P	See Sec. 25.09.07
	Major	S	S	S	See Secs 25.09.07 and 25.15.02.h
d. Institutional uses	Adult day care	S	S	S	
	Charitable or philanthropic institution	S	S	S	See. Sec. 25.15.02.e
	Child care home	P	P	P	
	Child care center:				Special exception subject to ~~See.~~ Sec. 25.15.02.f
	9 – 12 children	P	P	P	
	More than 12 children	S	S	S	
	Educational institution, private	S	S	S	See Sec. 25.15.02.g
	Hospital	S	S	S	See Sec. 25.15.02.i
	Housing for senior adults and persons with disabilities	S	P	P	Special exception subject to ~~See.~~ Sec. 25.15.02.j
	Life care facility	S	S	S	See. Sec. 25.15.02.k
	Nursing home	S	S	S	See. Sec. 25.15.02.i
	Places of worship	P	P	P	
	Private club	S	N	N	
e. Miscellaneous uses	Public utility building and structure	S	S	S	See. Sec. 25.15.02.n
	Publicly-owned or publicly-operated building and use, excluding sanitary landfills	C	C	C	Conditional use subject to a Level 3 Site Plan (Sec. 25.07.05)
	Wireless communication facility entirely within an existing building or on the roof or side of a building, or attached to an existing structure	C	C	C	Conditional use subject to the requirements of Sec. 25.09.08

	Uses	Zones			Conditional requirements or related regulations
		Residential Medium Density RMD-10	Residential Medium Density RMD-15	Residential Medium Density RMD-25	
Miscellaneous uses (con't)	Wireless communication facility not located entirely within an existing building or on the roof or side of a building, or attached to an existing structure, including, but not limited to antennas on a freestanding ground mounted antenna support structure	S	S	S	See Secs. 25.09.08 and 25.15.02.s
f. Temporary uses	Temporary building or yard for construction materials or equipment	C	C	C	Conditional use subject to the requirements of Sec. 25.09.04
	Portable Storage Units	C	C	C	
	Temporary office or model home	C	C	C	
	Christmas tree sales	C	C	C	
	Garden produce	C	C	C	
	Temporary carnival	C	C	C	
g. Accessory uses		P	P	P	See Secs. 25.09.01& 25.09.02
h. Commercial uses	Consumable goods to be used in the home	N	C	C	Conditional use permitted only in multi-unit buildings with at least 150 dwelling units. Uses must be primarily for the residents, and no direct entrance from the outside is permitted.
	Wearing apparel service	N	C	C	

25.11.04 –Development Standards

a. *Table of Development Standards* – The following table provides the development standards for the Residential Medium Density Zones:

Zone	Maximum Density – DU/Acre	Tract Area – Min.	Minimum Tract Frontage	Maximum Building Coverage (percent of tract area)	Setbacks	Maximum Height	Additional Regulations

Residential Medium Density (RMD-10)	10	Min. 20,000 sq. ft 10 acres max. unless otherwise recommended in the Plan	50 ft.	25%	25 feet from a public street or tract boundary, except 50 feet from a roadway of arterial or greater designation. Setback from a public street may be reduced where recommended in the Master Plan.	35 ft.	Accessory buildings limited to 15 feet building height.
Residential Medium Density (RMD-15)	15	1 acre	50 ft.	30%	25 feet from a public street or tract boundary, except 50 feet from a roadway of arterial or greater designation. Setback from a public street may be reduced where recommended in the Master Plan.	40 ft.	Accessory buildings limited to 15 feet building height
Residential Medium Density (RMD-25)	25	2 acres	100 ft.	30%	25 feet from a public street or tract boundary, plus 3 feet for each 1 foot of building height above 45 feet. Main buildings must be set back from each other ½ the height of the building, plus 3 feet for each 1 foot of building height above 45 feet.	75 ft.	Accessory buildings limited to 15 feet building height. Where the tract adjoins property within any Park Zone or within any residential zone where single unit detached or semi-detached development exists, building height must not exceed a 30 degree proximity slope that begins at the common property boundary See Sec. 25.17.06 regarding building shadow regulations.

b. *Moderately Priced Dwellings* – The Mayor and Council in approving a project plan application, may authorize an increase in the maximum number of dwelling units herein permitted where moderately priced dwelling units are included in the development in excess of the mandatory requirements as specified in Section 13.5-5 of the Moderately Priced Housing Ordinance.

c. *Yard Requirement* - Each single unit detached or single unit semi-detached dwelling unit must have a private yard.

~~d. *Existing Structures or Development* - Any structure or development in existence as of _____(effective date) that conforms to the development standards and requirements of the zone in effect immediately prior to (date of adoption) is considered to be conforming. In the event the structure or development is damaged or destroyed by fire, flood, explosion, or other cause or casualty outside the control of the property owner, the structure or development may be reconstructed to the density and configuration which existed immediately prior to the damage or destruction. Any extensions or additions to the existing structure or development that exceed five percent (5%) of the pre-existing gross floor area must comply~~

~~with all the development standards and requirements of the zone in which the property is located. If a structure is demolished, or a redevelopment of a site occurs, due to causes within the control of the property owner, all reconstruction and redevelopment must comply with the development standards and requirements of the zone in which the property is located, and any aspect of the previous development that did not comply with such standards and requirements cannot be replaced.~~

25.11.05 – Special Regulations for Development in the RMD-10 Zone

~~a.~~Development in the RMD-10 Zone must comply with the development density recommendations of the ~~relevant Master~~ Plan or relevant Neighborhood Plan.

~~b.No area proposed for open space, common area, or recreational facilities can be approved in any development unless the requirements of Article 17 in this Chapter are met.~~

25.11.06 – Special Provisions for Townhouse Development in the RMD Zones

The following applies to residential townhouse developments:

1. No more than eight (8) townhouse units can be in any one (1) attached row;

2. Townhouse groups must be set back 25 feet from each other;

3. Building front setbacks must be 18 feet from a public street right-of-way internal to the site;

4. Not more than two (2) contiguous townhouse units can have the same front building lines. All townhouse units required to be offset must be offset horizontally at least two (2) feet; ~~and~~

5. Record lots for each dwelling unit, if provided, must front on a public street, private street, or a common open space; and~~.~~

6. At least 50% of the development area must be open area.

25.11.07 – Process for Approval

Applications for approval of development in the R-MD Zones must be in accordance with the provisions of Sec. 25.07.02 of this Chapter.

25.11.08 – ~~Accessories~~ Accessory Uses and Structures

All accessory uses and structures within Residential Medium Density Zones must comply with the provisions of Article 9 of this Chapter.

25.11.09 – Nonconformities

All nonconforming uses and structures within Residential Medium Density Zones ~~must comply with~~ are subject to the provisions of Article 8 ~~and Section 25.11.04.d. of this Chapter~~.

25.11.10 – Parking and Loading Requirements

Parking, access, and loading requirements within Residential Medium Density Zones must not be waived ~~for development~~, but may be modified in the following respects subject to the procedures set forth below:

1. *Access to Dwelling Units* – Access to each dwelling may be by a public right-of-way or a private vehicular or pedestrian way owned by the individual lot owners in fee or in common ownership with the other owners of the development. Any private vehicular way must be designed and constructed in a manner adequate to meet the requirements of stormwater management, firefighting equipment, furniture moving vans, fuel trucks, refuse collection, delivery vehicles, and snow removal equipment and must be constructed comparable to the standards for a public secondary street.

2. *Quantity of Parking Spaces Required* – Parking must be provided in accordance with the provisions of Article 16.

3. *Separation of Parking Area or Interior Driveway* – No parking space or interior driveway can be located within ten feet (10') of any public right-of-way or property in an adjacent Single Dwelling Unit ~~Detached~~ Residential Zone.

4. *Distance from Parking Area to Dwelling Unit* – Surface ~~P~~parking that is authorized in any development must be located within 150 feet of each dwelling unit served thereby.

5. *Separation of Parking Spaces* – Not more than eight (8) surface parking spaces are allowed in a single row unless planted separator islands or swales are provided.

~~6.Where pedestrian or bicycle access exists or is expected to exist, parking must be structured to minimize interactions between pedestrians and bicyclists with automobiles by provided safe access ways for bicycles and pedestrians.~~

25.11.11 – Landscaping and Buffer Requirements

All landscaping and buffering within Residential Medium Density Zones must comply with the provisions of Article 17 of this Chapter and, where applicable, the Forest and Tree Preservation Ordinance.

25.11.12 – Signs

All signs within Residential Medium Density Zones must comply with the provisions of Article 18 of this Chapter.

Article 12 – Industrial Zones

25.12.01 - Purpose

a. *Light Industrial* – The purpose of this zone is to provide space for limited light manufacturing, warehousing, and wholesaling facilities necessary to serve residents of the City and surrounding areas, to provide general retailing facilities for certain commodities appropriate in an industrial zone, and to provide ~~live-work housing opportunities entirely within the same building for employees of these businesses~~certain limited housing opportunities.

b. *Heavy Industrial* – The purpose of this zone is to provide sites for a wide range of industrial and related uses which may need various types of access, and which, because of the nature of their operation, may or may not be compatible in close proximity to other land uses.

25.12.02 – Zones Established

The individual zones include the following:

Type of Zone	Distinguishing Feature	Name of Zone
Industrial	Lower impact industrial zone allowing live-work units	Industrial, Light ("I-L")
	Higher impact industrial zone	Industrial, Heavy ("I-H")

25.12.03 – Land Use Tables

a. The uses permitted in the Industrial zones are shown in the table below.

b. Uses are subject to applicable conditions of site plan approval.

c. All special exceptions are subject to the requirements of Article 15.

d. Key: P = Permitted Use; S = Special Exception; C = Conditional Use; N = Not Permitted

	Uses	Zones		Conditional requirements or related regulations
		Light Industrial I-L	Heavy Industrial I-H	
a. Residential uses				
	Live/work unit	P	N	Includes dwelling unit for caretaker in connection with a self-storage warehouse.
	Personal living quarter	S	N	See Sec. 25.15.02.l
b. Institutional uses	Adult day care	P	N	
	Charitable or philanthropic institution	P	N	~~Conditional use must not exceed 5,000 sq. ft. of gross floor area~~
	Child care center	P	N	
	Educational institution, private	P	N	
	Places of worship	P	N	
c. Medical services	Ambulance service	C	N	Conditional use must not adjoin residential uses
	Hospital	S	N	Sec. 25.15.02.i
	Veterinary office and animal hospital	P	N	
e. Temporary uses	Christmas tree sales	C	C	Conditional use subject to the requirements of Sec. 25.09.04
	Garden produce	C	N	
Temporary uses (con't)	Temporary building or yard for construction materials or equipment	C	C	Conditional use subject to the requirements of Sec. 25.09.04
	Temporary carnival, flea market, or festival	C	C	
	Temporary office or model home	C	C	
	Mobile uses	C	N	
	Portable Storage Units	C	C	
f. Commercial, office, and industrial uses				
	Alcoholic beverages for consumption on the premises of any restaurant	P	N	
	Auctioneer and commercial gallery	~~C~~P	N	~~Use limited to 2,500 sq. ft. for any 1 tenant~~
	Boats and marine supplies	P	N	
	Garden supplies	P	N	
	Home improvement service	P	P	
	Home maintenance services	P	P	
	~~Office b~~Business equipment sales and service	N	N	
	Pawnbroker	S	N	See Section 25.15.02.m
	Public transportation station	C	C	Conditional use must comply with any Plan recommendation
	Repair of household appliances, inc'l home electronic equipment	P	N	

	Uses	Zones		Conditional requirements or related regulations
		Light Industrial I-L	Heavy Industrial I-H	
	Taxicab service	P	N	
	Wearing apparel and related accessories	P	N	
Commercial, office, and industrial uses (con't)	Wearing apparel services	P	N	
	Caterer, no seating	P	N	
	Carry-out	P	N	
	Restaurant	S	N	See Sec. 25.15.02.o
	Duplicating service	P	N	
	~~General or professional~~ Office	C	N	Conditional use limited to 25% of the gross floor area of a building
	Medical or dental laboratory	P	N	
	Automobile filling station (Class I and II)	S	S	See Sec. 25.15.02.c
	Automobile fluid maintenance station	P	N	
	Automotive repair garage	P	N	
	Mechanical car wash	P	N	
	Motor vehicle and trailer sales, indoor; including new and reconditioned parts and accessories and service incidental thereto	P	N	
	Motor vehicle towing service, without storage on the premises	P	N	
	Tires, batteries, and accessory sales, including service incidental thereto	P	N	
g. Miscellaneous uses	Adult oriented establishment	S	N	See Sec. 25.15.02.b
	Health and fitness establishment	P	N	~~Conditional use limited to 4,500 sq. f.~~
	Kennel	P	P	
~~Miscellaneous Use (con't.)~~	Outdoor recreational establishment, commercial, except shooting gallery or range	S	N	
	Private club	P	N	
	Public utility building and structure	P	P	
	Publicly-owned or publicly-operated building and use, excluding sanitary landfill	P	P	

	Uses	Zones		Conditional requirements or related regulations
		Light Industrial I-L	Heavy Industrial I-H	
	Recreational establishment, indoor, commercial, except shooting gallery or range	C	N	Conditional use cannot occupy more than 50% of any building.
	Shooting gallery or range	S	S	
	Sport facility, multi-purpose, indoor, commercial	P	N	
	Wireless communication facility entirely within an existing building or on the roof or side of a building, or attached to an existing structure	C	C	Conditional use subject to the requirements of Sec. 25.09.08
	Wireless communication freestanding ground mounted antenna support structure	S	S	Subject to the requirements of Sec. 25.09.08 and 25.15.02.s
	Renewable energy equipment, free standing~~Wireless communication facility entirely within an existing building or on the roof or side of a building, or attached to an existing structure~~	C~~C~~	C~~C~~	Special exception required for height in excess of 50 ft.~~Conditional use subject to the requirements of Sec. 25.09.08~~
	Heavy industrial use	N	P	
h. Industrial and service uses	Light and medium industrial use~~Heavy industrial use~~	P~~N~~	P~~P~~	
	Lumberyard~~Light and medium industrial use~~	C~~P~~	P~~P~~	Conditional Use shall not adjoin a Single Unit Development Residential Zone
	Service industrial use~~Lumberyard~~	P~~C~~	P~~P~~	~~Conditional Use shall not adjoin a Single Unit Development Residential Zone~~
	~~Service industrial use~~	~~P~~	~~P~~	

25.12.04 - ~~Dimensional and~~ Development Standards

a. *Table of ~~Dimensional and~~ Development Standards*

Max zone area (acres)	Min. Zone Area (square feet)	Lot Coverage		Setback Requirements						Maximum Height	Cond requiren related re
					Side Yard				Rear Yard		
					Minimum 1 Side						
		Max. Lot cover-age (%)	Min. open area (%)	Min. Front (feet)	Side Street abuttin g (feet)	Nonresidential land abutting (feet)	Residen-tial. land abutting (feet)	Residential land abutting (feet)	Nonresiden-tial land abut (feet)		
N/A	N/A	50	10	25’	10’	0 or at least 10’ if provided	Building height, but not less than 30’	Building height, but not less than 30’	0 or at least 10’ if provided	40’	
N/A	N/A	N/A	10	25’	10’ from ROW, or 60’ from center-line	0 or at least 10’ if provided	Building height, but not less than 30’	Building height, but not less than 30’	0 or at least 10’ if provided	70’	

b. *Setbacks*

1. *Side Yard Setbacks* – Two (2) side yard setbacks are required unless otherwise specified in the development standards table in 25.12.04.a above.

2. *Side and Rear Setbacks with Residential Land Abutting* - The minimum setback from abutting residential land shall not apply when the land is shown for nonresidential use in the Plan.

c. *Parking Structures* – Parking structures constructed at or below grade are excluded from the lot coverage and building setback requirements.

d. *Additional Industrial Zone Standards* – Additional standards to mitigate the impact of development on adjoining residential development, excluding mixed-use developments which include residential uses are as follows:

1. *Façade and Structured Parking Abutting Residential Land* - For new nonresidential development or redevelopment, when abutting residential land that is shown as residential in the Plan, the following standards apply:

(a) A building façade of 100 feet or more should include projections, recessions, or other treatments sufficient to reduce the unbroken massing of the façade along all sides of the building facing public streets.

(b) If a building façade exceeds 200 feet long facing a residential zone, the building must be set back one foot (1') for each additional foot of length exceeding 200 feet.

(c) Structured parking above grade is prohibited where the parking structure would be immediately adjacent to a Single Dwelling Unit Residential Zone property ~~where residential development is limited to a maximum building height of 35 feet~~.

2. *Layback Slope* - In addition to the height limits set forth in this Article, a building cannot penetrate a layback slope line of 30 degrees, beginning from the closest ground point of the lot line of any property within a Park Zone or within any residential zone where single unit detached or semi-detached development exists, regardless of intervening roads or other transportation facilities as shown in figure 12.1. This layback slope requirement does not apply to nonresidential historic sites or parks in the Industrial zones.

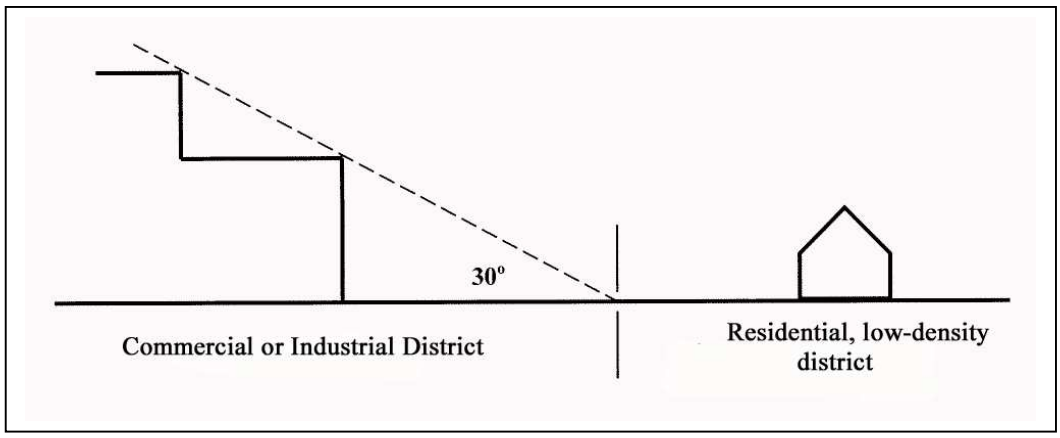

Figure 12.1 - Layback Slope Example

25.12.05 – ~~Accessories~~ Accessory Uses and Structures

All accessory uses and structures within ~~industrial~~ Industrial ~~zones~~ Zones must comply with the provisions of Article 9 of this Chapter.

25.12.06– Nonconformities

All nonconforming uses and structures within ~~industrial~~ Industrial ~~zones~~ Zones must comply with the provisions of Article 8 of this Chapter.

25.12.07~~7~~ – Parking and Loading Requirements

All parking and loading within industrial zones must comply with the provisions of Article 16 of this Chapter.

25.12.08~~8~~ – Landscaping and Buffer Requirements

All landscaping and buffering within Industrial ~~zones~~ Zones must comply with the provisions of Article 17 of this Chapter and, where applicable, the Forest and Tree Preservation Ordinance.

25.12.0~~0~~9~~9~~ – Signs

All signs within Industrial ~~zones~~ Zones must comply with the provisions of Article 18 of this Chapter.

Article 13 – Mixed-Use Zones

25.13.01 – Purpose

a. The purposes of the Mixed-Use Zones are as follows:

1. To create high-quality neighborhoods and zones that are attractive and pedestrian-oriented;

2. To allow for a mix of different types of land uses in a compatible manner, both vertically and horizontally;

3. Consistent with the Environmental Guidelines, to ensure the provision of public spaces that enhance the built environment;

4. To minimize automobile use and maximize the use of public transportation, bicycle, and pedestrian access within the City;

5. To promote a variety of uses in close proximity to each other in compliance with the Master Plan's recommendations;

6. To establish performance standards to ensure that allowed uses will not create a nuisance for other uses within the same development;

7. To provide standards and guidelines for assuring that the appearance and design of buildings, structures, and neighborhoods are compatible with existing nearby buildings and structures, and/or complies with any adopted design guidelines in the relevant Plan for the area in which the building or structure is to be located;

8. To provide for a variety of residential uses and diverse styles of housing which are compatible with the intent of each of the Mixed-Use Zones; and

9. To provide for more efficient land use, particularly a development pattern more flexible in adjusting to market conditions and local growth fluctuations.

b. In order to achieve these purposes, the Mixed-Use Zones permit a variety of uses within the allowable building envelopes, which can include residential, offices, and retail sales, and in certain zones light industrial uses.

25.13.02 - Zones Established

To achieve the intent of the recommendations of the Master Plan, each mixed-use zone contains different sets of standards and requirements to respond to the needs of

individual neighborhoods of the City. These mixed-use zones are listed below, along with a description of the purpose of each zone.

Type of Zone	Distinguishing Feature	Name of Zone
Mixed Use	Intended for use in areas near Metro stations, it allows for high-density development of retail, office, and residential uses consistent with the recommendations of the ~~Town Center Master Plan and the Rockville Pike Corridor Master~~ Plan.	Mixed-Use Transit District Zone ("MXTD")[1]
	Intended for areas along major highway corridors outside of the MXTD Zone areas, it allows for medium density development of retail, office, and residential uses. Because of the nature of highway corridor areas, the zone provides flexibility in the siting of buildings relative to major roadways and other site requirements to accommodate service drives and required parking.	Mixed-Use Corridor District Zone ("MXCD")
	Intended for areas that are either currently developed or are recommended for development primarily for office, light industrial, and industrial park uses, this zone allows for medium density development of office, retail, and residential uses. A mix of office and residential uses, including live/work and work/live units, is encouraged.	Mixed-Use Employment ("MXE")
	Intended for areas that are either currently developed or recommended for development primarily for retail sales, neighborhood services, home improvement services, and compatible residential development in areas convenient to both higher-density commercial zones and single-unit detached residential uses. This zone allows for a range of densities as determined by the applicable master plan and permits retail, service, office, and residential uses.	Mixed-Use Business ("MXB")

[1] For purposes of ~~satisfactory~~ satisfying~~-~~ the requirements of Article 2B, 9-102.1(g) "Rockville license," of the Annotated Code of Maryland, property within this zone shall be deemed to be within the Rockville Town Center zone.

Type of Zone	Distinguishing Feature	Name of Zone
Mixed Use	Intended for sites that are either currently developed or recommended for development primarily for local retail and service uses in areas either within or in close proximity to single unit detached residential uses. This zone allows for low to moderate density development of retail, service, office, and residential uses. This zone is not intended to provide for major employment, so office uses are limited.	Mixed-Use Neighborhood Commercial ("MXNC")
	Intended for sites that are either currently developed or recommended for development primarily for local retail and service uses in areas either within or in close proximity to single-unit detached residential uses. This zone allows for low density development of retail, service, office, and residential uses. This zone is not intended to provide for major employment, so office uses are limited.	Mixed-Use Commercial ("MXC")
	Intended for areas that are located between moderate or high-density development and single-unit detached residential neighborhoods~~, together with other transitional zones~~. This zone allows for development of low density multi-unit, attached and townhouse residential development, and may include other neighborhood-serving uses.	Mixed-Use Transition ("MXT")

Note: Provisions for development in Planned Development areas are contained in Article 14.

25.13.03 – Land Use Tables

a. The uses permitted in the Mixed-Use Zones are as shown in the table below.

b. Uses are subject to applicable conditions of site plan approval.

c. All special exceptions are subject to the requirements of Article 15.

d. Key: P = Permitted Use; C = Conditional Use; S = Special Exception; N = Not Permitted

	Uses	Zones							Conditional requirements or related regulations
		Mixed-Use Transit District (MXTD)	Mixed-Use Corridor District (MXCD)	Mixed-Use Employment (MXE)	Mixed-Use Business (MXB)	Mixed-Use Neighborhood Commercial (MXNC)	Mixed-Use Commercial (MXC)	Mixed-Use Transition (MXT)	
a. Residential uses	Dwelling, single unit detached	N	C	C	C	C	P	P	Conditional use subject to the requirements of Sec. 25.13.04.a.
	Dwelling, one-unit semi-detached (duplex)	N	N	C	P	C	N	P	Conditional use subject to the requirements of Sec. 25.13.04.a.
	Dwelling, townhouse	~~N~~P	~~C~~P	~~C~~P	~~C~~P	~~C~~P	N	C	Conditional use subject to the requirements of Sec. 25.13.04.a.
	Dwelling, attached	P	P	P	P	P	N	C	
Residential (con't)	Dwelling, multiple-unit	P	P	P	P	P	C	C	Conditional use subject to the requirements of Sec. 25.13.04.a.
	Live/work unit	P	P	P	P	P	P	P	
	Personal living quarters	P	P	P	P	P	N	P	
Swimming pool, Accessory		P	P	P	P	P	P	P	
b. Home-based business enterprise	No impact	P	P	P	P	P	P	P	See Sec. 25.09.07b.
	Minor	P	P	P	P	P	P	P	See Sec. 25.09.07c
	Major	S	S	S	S	S	P	S	See Secs. 25.09.07d and 25.15.02.h
c. Institutional uses	Adult day care	P	P	P	P	P	P	S	
	Charitable or philanthropic institution	P	P	P	C	C	C	C	Conditional uses must not exceed 5,000 sq. ft. of gross floor area
	Child care home	C	C	C	P	P	P	P	Conditional use permitted only in single-unit detached dwelling
	Child care center:								
	9 – 12 children	P	P	P	P	P	P	P	

	Uses	Zones							Conditional requirements or related regulations
		Mixed-Use Transit District (MXTD)	Mixed-Use Corridor District (MXCD)	Mixed-Use Employment (MXE)	Mixed-Use Business (MXB)	Mixed-Use Neighborhood Commercial (MXNC)	Mixed-Use Commercial (MXC)	Mixed-Use Transition (MXT)	
	More than 12 children	P	P	P	P	P	P	P	
Institution-al uses (con't)	Educational institution, private	P	P	P	P	S	P	S	See. Sec. 25.15.02.g
	Housing for senior adults and persons with disabilities	P	P	P	S	P	S	S	Special exception subject to ~~See~~ Sec. 25.15.02.j
	Library, museum, and art gallery or studio	P	P	P	P	C	C	C	Conditional uses must not exceed 5,000 sq. ft. of gross floor area
	Nursing home	N	P	P	S	S	N	S	Special exception subject to ~~See.~~ Sec. 25.15.02.i
	Place of worship	P	P	P	P	P	P	P	
d. Medical services	Ambulance service	N	P	P	C	C	C	N	Conditional use must not adjoin or confront residential uses
	Hospital	S	S	P	S	~~P~~S	N	P	Special exception subject to ~~See~~ Sec. 25.15.02.i
	Medical practitioners office in an apartment building	P	P	C	N	C	N	N	Conditional use subject to the requirements of Sec. 25.13.04.b
	Veterinary office and/or animal hospital	P	P	P	P	C	P	C	Conditional uses must not exceed 2,500 sq. ft. of gross floor area.
e. Miscellan-eous uses	Kennel	N	N	C	N	N	N	N	~~No~~ Conditional use must not have outside runs
	Private club	P	P	P	P	S	N	S	
	Public utility building and structure	P	P	P	P	P	P	C	Conditional uses in buildings must have a residential appearance and comply with the height, bulk and setback requirements of the relevant zone

	Uses	Zones							Conditional requirements or related regulations
		Mixed-Use Transit District (MXTD)	Mixed-Use Corridor District (MXCD)	Mixed-Use Employment (MXE)	Mixed-Use Business (MXB)	Mixed-Use Neighborhood Commercial (MXNC)	Mixed-Use Commercial (MXC)	Mixed-Use Transition (MXT)	
	Publicly-owned or publicly-operated building and use, excluding sanitary landfill	P	P	P	P	S	P	S	
Miscella-neous uses (con't)	Wireless communication facility entirely within an existing building or on the roof or side of a building, or attached to an existing structure	C	C	C	C	C	C	C	Conditional use subject to the requirements of Sec. 25.09.08
	Wireless communication freestanding ground mounted antenna support structure	S	S	S	S	S	S	S	~~Subject to the requirements of~~See Sec. 25.09.08 and 25.15.02.s
f. Tempor-ary uses	Temporary building or yard for construction materials or equipment	C	C	C	C	C	C	C	Conditional use subject to the requirements of Sec. 25.09.04 ~~Conditional use subject to the requirement of Sec. 25.09.04~~
	Portable Storage Units	C	C	C	C	C	C	C	
	Temporary office or model	C	C	C	C	C	C	C	
	Christmas tree sales	C	C	C	C	C	C	C	
	Sale of Garden produce	C	C	C	C	C	C	C	
Tempor-ary uses (con't)	Temporary carnival or local festival	C	C	C	N	N	C	N	
h. Commer-cial, office, and industrial uses	**Retail sales and services:**								
	Alcoholic beverages for consumption off the premises	P	P	P	~~P~~N	C	C[1]	C	For conditional use, tenant area limited to 5,000 sq. ft. of gross floor area

	Uses	Zones							Conditional requirements or related regulations
		Mixed-Use Transit District (MXTD)	Mixed-Use Corridor District (MXCD)	Mixed-Use Employment (MXE)	Mixed-Use Business (MXB)	Mixed-Use Neighborhood Commercial (MXNC)	Mixed-Use Commercial (MXC)	Mixed-Use Transition (MXT)	
	Alcoholic beverages for consumption on the premises of any restaurant	P	P	P	P	P	P	P	
	Auctioneer and commercial gallery	P	P	P	P	C	C	C	For conditional use, tenant area limited to 2,500 sq. ft. of gross floor area
	Boats and marine supplies	N	C	C	C	N	N	N	For conditional use, ~~All~~ all sales and storage must be indoors
	Consumable goods to be used in the home	P	P	P	P	C	P	C	Conditional uses limited to 2,500 sq. ft. of gross floor area for each tenant, other than a grocery store or drug store
	Drug store with drive-through	C	C	C	C	C	C	C	~~Conditional use subject to the requirements of~~See Sec. 25.13.04.c
	Durable goods to be used in the home	P	P	P	P	C	C	N	For conditional use, tenant area is limited to 2,500 sq. ft. of gross floor area
	Flowers, except from outdoor garden or greenhouse	P	P	P	P	C	C	C	For conditional use, tenant area is limited to 2,500 sq. ft. of gross floor area
Commer-cial, office, and industrial uses (con't)	Funeral home	C	C	C	C	C	C	C	Cremations permitted only where existing as of (date of adoption)
	Garden supplies	C	C	C	C	C	C	C	Indoor sales only
	Home improvement service	N	N	P	P	N	N	N	

Uses	Zones							Conditional requirements or related regulations
	Mixed-Use Transit District (MXTD)	Mixed-Use Corridor District (MXCD)	Mixed-Use Employment (MXE)	Mixed-Use Business (MXB)	Mixed-Use Neighborhood Commercial (MXNC)	Mixed-Use Commercial (MXC)	Mixed-Use Transition (MXT)	
Home maintenance services	P	P	P	P	P	P	P	
Mobile uses	C	C	C	C	C	C	C	See Sec. 25.09.04.d.5
Multiple product range retail store (department store)	P	P	N	N	C	N	N	Conditional use limited to a maximum of 25,000 sq. ft. of gross floor area.
~~Office b~~Business equipment sales and service	P	P	P	P	N	P	N	
Personal care facility	P	P	P	P	P	P	P	
Personal Services	P	P	P	P	P	P	P	
Pet grooming	N	P	P	P	P	P	P	
Public transportation station	P	P	P	C	C	C	C	Conditional use must comply with any recommendations of the Plan
Repair of household appliances, inc'l home electronic equipment	P	P	P	P	P	P	N	
Taxicab service	N	N	S	P	N	N	N	~~See~~ Special exception subject to Sec. 25.15.02.q
Wearing apparel and related accessories	P	P	P	P	C	C	C	Conditional uses limited to 2,500 sq. ft. of gross floor area for each tenant
Wearing apparel services	P	P	P	P	P	P	P	
Food Services:								
Carry-out	P	P	P	P	P	P	P	
Caterer, no seating	P	P	P	P	N	N	N	

	Uses	Zones							Conditional requirements or related regulations
		Mixed-Use Transit District (MXTD)	Mixed-Use Corridor District (MXCD)	Mixed-Use Employment (MXE)	Mixed-Use Business (MXB)	Mixed-Use Neighborhood Commercial (MXNC)	Mixed-Use Commercial (MXC)	Mixed-Use Transition (MXT)	
Commer-cial, office, and industrial uses (con't)	Restaurant, no drive-through	P	P	P	P	P	P	P	
	Restaurant with drive-through	N	S	N	S	N	S	N	See. Sec. 25.15.02.c
	Office Uses:								
	Archival Record Storage	N	N	P	P	N	N	N	
	Bank or financial institution	P	P	P	P	P	P	P	
	Bank or financial institution with drive/through	C	C	C	C	C	C	C	Conditional use subject to the requirements of Sec. 25.13.04.d
	Duplicating service	P	P	P	P	C	C	C	Conditional uses limited to 2,500 sq. ft. of gross floor area
	~~General or professional o~~Office	P	P	P	P	C	C	C	Conditional uses limited to 4,000 sq. ft. of gross floor area for each tenant[3]
	Medical or dental laboratory	P	P	P	P	N	N	N	
	Medical or professional office	P	P	P	P	C	C	C	Conditional uses are limited to no more than 4,000 gross sq. ft. of floor area per tenant
	Non-medical research laboratory	N	N	P	P	N	N	N	
	Motor vehicle services:								

	Uses	Zones							Conditional requirements or related regulations
		Mixed-Use Transit District (MXTD)	Mixed-Use Corridor District (MXCD)	Mixed-Use Employment (MXE)	Mixed-Use Business (MXB)	Mixed-Use Neighborhood Commercial (MXNC)	Mixed-Use Commercial (MXC)	Mixed-Use Transition (MXT)	
	Automobile parts sales; no installation or service	N	P	P	P	N	N	N	
Commer-cial, office, and industrial uses (con't)	Automobile filling station (Class I and II)	S	S	S	~~S~~N	S	S	N	See Sec. 25.15.02.c
	Automobile fluid maintenance station	N	P	P	P	N	N	N	
	Automobile rental	P	P	P	P	N	P	N	
	Automotive repair garage	N	~~P~~N	P	P	N	N	N	
	Mechanical car wash	N	P	P	N	N	N	N	
	Motor vehicle and trailer sales, excluding trucks and trailers exceeding three-fourths-ton capacity.,~~, indoor;~~ including new and reconditioned parts and accessories and service incidental thereto.[2]	~~C~~N	C	~~P~~C	C	N	N	N	See footnote 2~~For conditional uses, all accessory uses and activities must be located in the same building as the sales use.~~

	Uses	Zones							Conditional requirements or related regulations
		Mixed-Use Transit District (MXTD)	Mixed-Use Corridor District (MXCD)	Mixed-Use Employment (MXE)	Mixed-Use Business (MXB)	Mixed-Use Neighborhood Commercial (MXNC)	Mixed-Use Commercial (MXC)	Mixed-Use Transition (MXT)	
	~~Motor vehicle and trailer sales, outdoor; excluding trucks and trailers exceeding three-fourths-ton capacity, when conducted as an accessory use to indoor motor vehicle and trailer sales~~[2]	~~N~~	~~C~~	~~C~~	~~N~~	~~N~~	~~N~~	~~N~~	~~Vehicle storage areas must be screened to 100% opacity from adjacent or confronting residential development in a residential zone.~~
	Motor vehicle towing service, without storage on the premises	N	N	N	P	N	N	N	
Commer-cial, office, and industrial uses (con't)	Tires, batteries and accessory sales, including service incidental thereto.	N	N	N	P	~~N~~C	N	~~N~~C	
	Parking facilities:								
	Commercial parking facility	C	C	C	C	N	N	N	Conditional use subject to the requirements of Sec. 25.13.04.e
	~~Structures~~	~~P~~	~~P~~	~~P~~	~~C~~	~~N~~	~~C~~	~~N~~	~~Conditional use must be consistent with the design and locational recommendations of the relevant master plan.~~
h. Assembly and entertain-ment	Health and fitness establishment	P	P	P	P	C	C	C	Conditional use limited to 4,000 gross square feet of floor area.
	Hotel	P	P	P	P	S	N	N	

	Uses	Zones							Conditional requirements or related regulations
		Mixed-Use Transit District (MXTD)	Mixed-Use Corridor District (MXCD)	Mixed-Use Employment (MXE)	Mixed-Use Business (MXB)	Mixed-Use Neighborhood Commercial (MXNC)	Mixed-Use Commercial (MXC)[1]	Mixed-Use Transition (MXT)	
	Indoor entertainment establishment, commercial, except shooting gallery or range	P	P	P	P	C	N	N	Conditional use subject to a Level 2 Site Plan Review
	Outdoor recreational establishment, commercial, except shooting gallery or range.	S	S	S	N	S	N	N	
	Sports facility, multi-purpose, indoor commercial	P	P	P	P	S	N	N	
Assembly and entertain-ment (con't)	Recreational establishment, indoor, commercial, except shooting gallery or range	N	P	P	P	S	N	N	
	Rental hall for meetings and social occasions	P	P	P	P	C	N	N	Conditional uses limited to a maximum of 4,000 square feet of gross floor area.
	Shooting gallery or range	N	N	S	N	N	N	N	
	Theater, including dinner theater	P	P	P	~~N~~P	N	N	N	
i. Industrial and service uses	Service industrial use	N	N	**P**	C	N	N	N	Conditional use must not adjoin or confront single-unit dwellings
	Light and medium industrial use	**N**	N	P	N	N	N	N	

[1] Conditional use in the MXC Zone is not permitted when adjoining a Single Unit Development Residential Zone.

[2] ~~*Consistent with the operational characteristics of a vehicle sales facility, the use should be generally consistent with the intent of the design guidelines for the zone as set forth in Section 25.13.07.*~~*Special provisions for motor vehicle and trailer sales.*

a. All buildings, off-street parking and loading areas and all outdoor storage and display of motor vehicles must be set back 50 feet from any adjoining or abutting land classified in a residential zone. Where the Plan recommends a setback from a public street greater than the minimum required, the Plan takes precedence.

b. The storage of waste material, auto parts, refuse and motor vehicles is prohibited in any required setback area.

c. The requirement for providing public use space may be met in whole or in part through the fee-in-lieu process as set forth in Article 17.

[3] *Development of general offices that exists as of [effective date] is considered a conforming use and may be continued, repaired or replaced so long as the total amount of gross floor area devoted to office uses is not increased beyond that which was in existence as of [effective date].*

25.13.04 – Special Regulations for Conditional Uses

a. *Residential* – Where residential uses are permitted as conditional uses in a Mixed-Use Zone, other than the MXC Zone, they are only allowed in those areas of the zone recommended for such use in the Plan. The Planning Commission in approving such conditional uses shall establish such development standards as deemed necessary to render such uses suitable and compatible with the surrounding uses and in accordance with the intent of the Plan. In the Mixed-Use Commercial (MXC) Zone, multiple-unit dwellings are not permitted at the ground floor level.

b. *Medical Practitioner's Office in a Multiple-Unit Dwelling*– The conditional use must meet the following standards:

   1. The exterior of the building must not be altered except for display of a sign;

   2. No office can be located on a floor above the highest ground floor entry, and the interior office entrance must be located so as to minimize the distance to the exterior entry; and

   3. Off-street parking must be provided in accordance with Article 16 in addition to those spaces required for the residential portion of the building.

c. *Drug Store with Drive-Through Service Window* – In the MXTD Zone, the drive-through must be incorporated and enclosed within a building or structure. In the other zones where allowed, the drive-through must be arranged so as to not obstruct traffic circulation within the site. Sufficient reservoir spaces must be provided and

must be located so as not to obstruct vehicle or pedestrian circulation or parking within the site or accessing the site.

d. *Banks and Financial Institution~~s~~ with Drive-Through* – In the MXTD Zone, the drive-through must be incorporated and enclosed within a building or structure. In the other zones where allowed, the drive-through must be arranged so as to not obstruct traffic circulation within the site. Sufficient reservoir spaces must be provided and must be located so as not to obstruct vehicle or pedestrian circulation or parking within the site or accessing the site.

e. *Commercial Parking Facility* – ~~This~~ A commercial Parking Facility ~~use~~ is only permitted ~~as part of a~~ in the form of a parking structure. At least 75% of the ground level floor street frontage must be devoted to commercial uses.

25.13.05 –Development Standards

a. *Build-To Lines* – Where a build-to line established in the Plan is required, at least 70% of the length of the building wall facing that line must be set at the build-to line.

b. *Development Standards*

1. The following table sets forth the development standards for each of the Mixed-Use Zones:

Zone	Maximum Height (in feet)[2]	Public Use Space (min. %)	Setbacks					**Special Regulations**
			Public Right-of-way Abutting	Side		Rear		
				Residential Land Abutting	Non-residential Land Abutting[1]	Residential Land Abutting	Non-residential Land Abutting	
MXTD	120[2]	20	None	25’	None	25’	None	See Secs. 25.13.05.b.2.(a) and 25.13.05.b.2.(e)
MXCD	75	20	None	25’ or height of building, whichever is greater	None 10’ min. if provided	25’ or height of building, whichever is greater	None 10’ min. if provided	See Secs. 25.13.05.b.2.(b) and 25.13.05.b.2.(3)

MXE	120	20	None required; 10' min. if provided	25' or ½ height of building, whichever is greater	None 10' min. if provided	25' or ½ height of building, whichever is greater	None 10' min. if provided	See Sec. 25.13.05.b.2.(c) and 25.13.05.b.2.(e)
MXB	55	20	None required; 10' min. if provided	25' or height of building, whichever is greater	None required; 10' min. if provided	25' or ½ height of building, whichever is greater	None required; 10' min. if provided	
MXNC	45[3]	20	None required; 10' min. if provided	25' or height of building, whichever is greater	None required; 10' min. if provided	25' or height of building, whichever is greater	None required; 10' min. if provided	See Sec. 25.13.05.b.2.(e)
MXC	30'	20	10'	15'	None required; 10' min. if provided	25' or height of building, whichever is greater	None required; 10' min. if provided	
MXT	35	20	10'	10'	None	20'	None required; 10' min. if provided	

[1]*Nonresidential Land Abutting Side Setback* – This term also includes multi-unit residential uses with a height of 45 feet or greater.

[2] ~~*MXTD Height Increase* –~~ Height ~~may be increased to 150 feet in accordance with~~ is subject to the provisions of Section 25.13.05.b.2~~(a)~~, below.

~~[3] *MXNC Height Increase* - Height may be increased to 65 feet in accordance with the provisions of Section 25.13.05.b.2.(d) below.~~

2. *Building Height*

(a) *MXTD Zone*–

~~(b)~~(i) Building facades ~~adjoining a public street right of way~~ should have a range of heights of between 45 and ~~a maximum of~~ 65 feet at the ~~street~~ building line. Additional building height up to 120 feet at the street may be allowed where recommended by the Plan or where approved by the Mayor and Council as part of a project plan under Section 25.07.06. Building ~~walls~~facades that exceed 250 feet in length should vary the façade height by at least ten feet (10') for some distance along the length of the ~~building wall~~facade in order to avoid a monotonous, monolithic appearance.

(ii) Where recommended in the Plan, or if approved by the Mayor and Council as part of a project plan approval in accordance with Section 25.07.06, building height may be increased beyond 120 feet up to 150 feet under the following conditions:

~~(i)~~ A The public use space requirement must be provided on the site;

~~(ii)~~ B. The building footprint cannot occupy more than 80% of the net lot area;

~~(iii)~~ C. The building design exceeds the urban design recommendations of the applicable Master Plan; and

~~(iv)~~ D. The building must ~~be designed for maximum energy conservation and/or~~ exceed ~~complies with~~ any energy conservation standards set forth in this Code.

(b) *MXCD Zone*– Building facades ~~adjoining a public street right-of-way~~ should have a range of heights of between 35 and ~~a maximum of~~ 50 feet at the ~~street~~ building line. Additional building height up to 75 feet at the building line may be allowed where recommended by the Plan or where approved by the Mayor and Council or Planning Commission as part of a project plan or site plan under Section 25.07.06 or Section 25.07.05 as applicable. Building ~~walls~~ facades that exceed 250 feet in length should vary the façade height by at least ten feet (10') for some distance along the length of the ~~building~~ facade ~~wall~~ in order to avoid a monotonous, monolithic appearance.

(c) *MXE Zone* – Buildings that exceed 45 feet in height, and do not abut any land existing or planned for a Single-Unit Detached or Semi-Detached Residential Zone, must be set back from the side and rear lot lines by a distance at least equal to one-half (1/2) the height of the building.

(d) *MXNC Zone* - Building height may be increased up to 65 feet when found suitable in accordance with the Plan.

~~(iii)~~ (e) *Layback Slope* – In addition to the height limits set forth in this Article, building height cannot penetrate a layback slope line of 30 degrees, beginning from the closest ground point of the lot line of any property in the Public Park Zone or within any Residential Zone where single unit detached, semi-detached, or townhouse development exists without regard to intervening roads or other transportation facilities as shown in Figure 13.1. This layback slope requirement does not apply to

(i) ~~the following:~~

~~(i)Nonresidential historic sites or public parks in the Mixed-Use zones:~~

~~(ii)Sites in a single-unit detached residential zone developed or recommended for nonresidential uses;~~

~~(iii)A~~areas adjacent to the MXT Zone;

(ii) areas adjacent to Metro rapid transit or railroad right of way.

~~(iv)Areas adjacent to the MXC Zone; or~~

~~(v)Areas within a PD Zone.~~

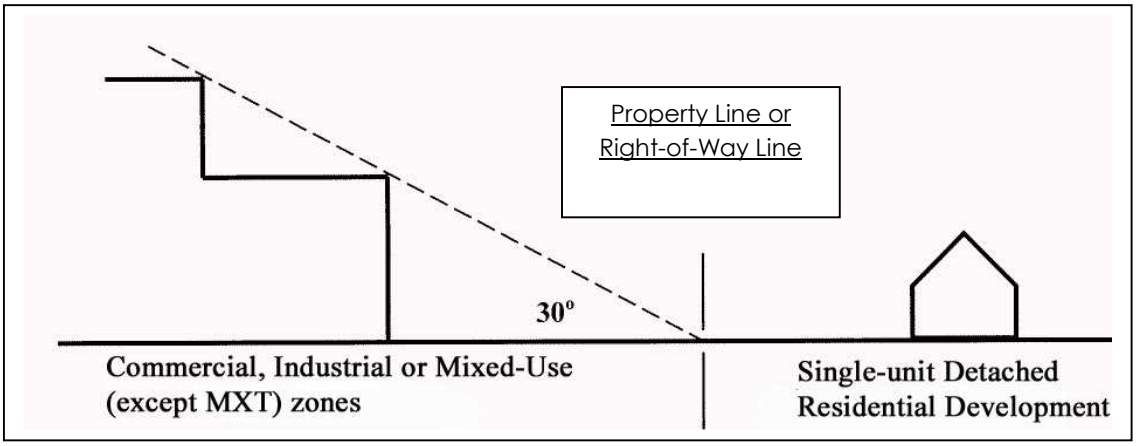

Figure 13.1- Layback Slope Example

c. *Other Standards and Requirements for New Development or Redevelopment*

1. *Conversion of Space* - Areas of a building originally designed for commercial or office use are encouraged to be designed to accommodate the conversion of the space to residential uses.

2. *Entryways* - Areas of a building originally designed for residential use at the ground floor level, having individual entries to the units, should have the entry from the ground level raised at least two (2) feet, or have another form of demarcation between the public sidewalk and the private entry. In order to be readily convertible to retail space, such areas must have a minimum ceiling height of 15 feet.

3. *Access* - Areas of a building intended for nonresidential uses must not have any access to areas of the building used for residential purposes. The residential areas must have their own private entries.

4. *Moderately Priced Dwelling Unit Ordinance Compliance* - Any development that includes residential units must comply with the Moderate Price Dwelling Unit requirements of Chapter 13.5 of the Code.

5. *Public Use Space* - In the Mixed-Use Zones, public use space shall be provided consistent with the provisions of Sec. 25.17.01~~, the method of meeting the public use space requirement is as follows:~~.

~~Public use space must be arranged in a manner that facilitates public access and use. Such space must be accessible for use and enjoyment by the general public, and may include space so located and treated as to enhance the amenity of the development by providing landscaping features, screening, or a general appearance of openness. Additional open space may be required where the applicable Plan recommends additional public use space.~~

~~(a)For sites below 40,000 square feet, where the building heights are less than 65 feet, and which are developed with nonresidential uses, the public use space requirement may be met by paying a fee-in-lieu in accordance with the provisions of Section 25.17.01.d.~~

~~(b)For sites of 40,000 square feet and greater, or for sites of any size where the building height is 65 feet or more, and which are developed with nonresidential uses, a minimum of ten percent (10%) of the public use space must be provided on-site. The balance may be provided on-site, or by paying the fee-in-lieu in accordance with the provisions of Section 25.17.01.d.~~

~~(c)For sites which include residential development, at least ten percent (10%) of the public use space must be provided on-site. The balance may be provided on-site, or by paying the fee-in-lieu in accordance with the provisions of Section 25.17.01.d.~~

~~d. *Existing Structures or Development* - Any structure or development in existence as of _____(effective date) that conforms to the development standards and requirements of the zone in effect immediately prior to (date of adoption) is considered to be conforming. In the event the structure or development is damaged or destroyed by fire, flood, explosion, or other cause or casualty outside the control of the property owner, the structure or development may be reconstructed to the density and configuration which existed immediately prior to the damage or destruction. Any extensions or additions to the existing structure or development that~~

~~exceed five percent (5%) of the pre-existing gross floor area must comply with all the development standards and requirements of the zone in which the property is located. If a structure is demolished, or a redevelopment of a site occurs, due to causes within the control of the property owner, all reconstruction and redevelopment must comply with the development standards and requirements of the zone in which the property is located, and any aspect of the previous development that did not comply with such standards and requirements cannot be replaced.~~

25.13.06 – Additional Design Guidelines

a. *Purpose.* It is the purpose of this section to establish guidelines that will promote the highest quality of development in the Mixed Use Zones. New development or *redevelopment should be consistent with the intent and purpose of the following guidelines.*

b.~~a.~~*Aesthetic and Visual Characteristics for All Zones*

1. *Facades and Exterior Walls Including Sides and Backs* – *(a)* Buildings must be designed in a way that avoids massive scale and uniform and impersonal appearance and that will provide visual interest consistent with the community's identity, character, and scale. It is recommended that ~~Building~~ building walls greater than 100 feet long ~~must~~ include projections, ~~or~~ recessions, or other treatments sufficient to reduce the unbroken massing of the façade along all sides of the building facing public streets.

   (a) Along any public street frontage building, design should include windows, arcades, awnings or other acceptable features along at least 60% of the building length. Arcades and other weather protection features must be of sufficient depth and height to provide a light-filled and open space along the building frontage. Architectural treatment, similar to that provided to the front facade must be provided to the sides and rear of the building to mitigate any negative view from any location off-site and any public area (e.g. parking lots, walkways, etc.) on site.

   (b) Buildings must include architectural features that contribute to visual interest at the pedestrian scale and reduce the massive aesthetic effect by breaking up the building wall along those sides fronting on public streets with color, texture change, wall offsets, reveals, or projecting ribs. Examples of such features are included in the City of Rockville's Guidebook to Design Guidelines for Retail Establishments and Shopping Centers.

2. *Roofs* – Roof design must provide variations in rooflines and add interest to, and reduce the massive scale of, large buildings. Roof features must complement the architectural and visual character of adjoining neighborhoods. Roofs must

include two (2) or more roof planes. Parapet walls must be architecturally treated to avoid a plain, monotonous look. For energy-saving purposes, roof design should also include a light color surface or be planted with vegetation.

~~3.~~

3. *Materials and Color*

   (a) *General ~~Standards~~ Provisions* - Buildings should have exterior building materials and colors that are aesthetically pleasing and compatible with materials and colors that are used in adjoining neighborhoods. ~~This includes the use of high-quality materials and colors that are low reflective, subtle, neutral, or earth tone.~~ Certain types of colors ~~must~~ should be avoided such as fluorescent or metallic, although brighter colors may be considered at the discretion of the Planning Commission.

   (b) *Materials Not Desired* - Construction materials such as tilt-up concrete, smooth-faced concrete block, prefabricated steel panels, and other similar materials ~~must~~ should be avoided unless the exterior surface is covered with an acceptable architectural treatment.

4. *Items Allowed Not Facing a Public Street* - The following items are only allowed either on sides not facing a public street or in the rear yard:

   (a) Window and wall air conditioners;

   (b) Electric utility meters;

   (c) Air conditioning compressors;

   (d) Irrigation and pool pumps;

   (e) Antennas; and

   (f) Satellite dishes.

   This provision does not apply to single-unit detached, semi-detached, or townhouse dwellings that may be located in a Mixed-Use Zone.

5. *Entryways* – Building design must include design elements which clearly indicate to customers where the entrances are located and which add aesthetically pleasing character to buildings by providing highly-visible customer entrances.

6. *Screening of Mechanical Equipment* – Mechanical equipment must be screened to mitigate noise and views in all directions. If roof-mounted, the screen must be designed to conform architecturally to the design of the building either with

varying roof planes or with parapet walls. A wood fence or similar treatment is not acceptable.

c~~b~~. *Site Design and Relationship to Surrounding Community*

1. *Vehicular Access* – In the MXTD, MXCD, and MXE zones, each site must provide safety and protection to adjacent residential uses by having motor vehicle access only from an arterial, major, or business district road as designated in the Plan.

2. *Buffers* – Each site must provide visual and noise buffers to nearby residential uses. This can be accomplished by providing a substantial building setback from a residential use or residentially zoned property that is adjacent to the site. A landscape buffer of substantial width should be provided adjacent to any property line where it adjoins residential uses or zones. The landscape buffer should include a variety of tree types at regular intervals with groupings of trees to provide noise, light, and visual screening. No other uses, such as, but not limited to, parking or storage, are permitted within the buffer area.

3. *Outdoor Sales and Storage*

   (a) *General Standards* - Areas for outdoor sales of products may be permitted if they are extensions of the sales floor into which patrons are allowed free access. Such areas must be incorporated into the overall design of the building and landscaping and must be permanently defined and screened with walls and/or fences. Materials, colors, and design of screening walls and/or fences shall conform to those used as predominant materials and colors on the building. If such areas are to be covered, then the covering shall be similar in materials and colors to those that are predominantly used on the building facade. Outdoor sales areas shall be considered as part of the gross floor area of the retail establishment, except for motor vehicle and trailer sales.~~.~~

   ~~(b)~~*Prohibition of Certain Sales and Storage* - Outdoor storage of products in an area where customers are not permitted is prohibited. This prohibition includes outdoor storage sheds and containers. Outdoor storage of motor vehicles in connection with a motor vehicle sales business is allowed~~, so long as the vehicles stored are only for sale at that location.~~

   ~~(a)~~(b) .

4. *Trash Recycling, Waste Oil/Grease Collection Area*

   (a) *Location* - Trash, recycling, and waste oil/grease collection areas must be located at least 50 feet from any residential use, residentially zoned property,

or street that is adjacent to the site, unless such operations are located entirely within an enclosed building or underground. All such areas must be proper~~t~~ly covered or secured.

(b) *Screening* - All trash recycling, and waste oil/grease collection areas that are not within an enclosed building or underground must be proper~~t~~ly secured and covered and screened or recessed so that they are not visible from public streets, public sidewalks, internal pedestrian walkways, or adjacent residential properties. Screening and landscaping of these areas must conform to the predominant materials used on the site.

5. *Parking Lots and Structures*

(a) *Parking Area Standards* - Parking areas must provide safe, convenient, and efficient access. They must be distributed around large buildings in order to shorten the distance to other buildings and public sidewalks, and to reduce the overall scale of the paved surface. Landscaping must be used to define parking areas, primary vehicular drives, and pedestrian areas in an aesthetically and environmentally pleasing manner.

(b) *Parking Structure Appearance* - Parking structure facades should achieve the same high quality design and appearance as the buildings they serve. The parking structures' utilitarian appearance should be minimized by utilizing effective design treatments such as colonnades, ~~green~~ planted ("green") walls, arcades, awnings, street furniture and other public amenities. Compatible materials, coordinated landscaping and screening, appropriate building color, sensitive lighting, and signage should all be considered for garage facades.

6. *Pedestrian Bicycle Flows* – Each site must provide for pedestrian accessibility, safety, and convenience to reduce traffic impacts and enable the development of the project. Continuous internal pedestrian walkways, no less than ~~eight~~ six feet (~~8'~~6') in width must be provided from the public sidewalk or right-of-way to the principal customer entrance of all principal buildings on the site. Sidewalks must also connect retail uses to transit stops on or off-site and to nearby residential neighborhoods. Sidewalks must be provided along the full length of any building where it adjoins a parking lot. On-site bicycle travel must be provided in accordance with Section 25.16.06.

7. *Central Features and Community Spaces* – Development must provide attractive and inviting pedestrian scale features, spaces, and amenities. Entrances and parking lot locations shall be functional and inviting with walkways conveniently tied to logical destinations. Bus stops should be considered integral parts of the configuration whether they are located on-site or along the street. Customer

drop-off/pick-up points that may be provided should also be integrated into the design and should not conflict with traffic lanes or pedestrian paths. Special design features such as towers, arcades, porticos, light fixtures, planter walls, seating areas, and other architectural features that define circulation paths and outdoor spaces must anchor pedestrian ways. Examples are outdoor plazas, patios, courtyards, and window shopping areas. Each development should have at least two (2) of these areas.

8. *Delivery and Loading Spaces, Hours of Operation*

   (a) *Design* - Delivery and loading operations must be designed in accordance with the provisions of Article 16 and located so as to mitigate visual and noise impacts to adjoining residential neighborhoods. If there is a residential use or residentially zoned property adjacent to the site, such operations must not be permitted between 10 p.m. and 7 a.m. For good cause shown, the Planning Commission may permit deliveries at additional times provided the applicant submits evidence that sound barriers between all areas for such operations effectively reduce emissions to a level of 55 dB or less, as measured at the lot line of any adjoining property. Delivery and loading areas must be substantially set back from a residential use or residentially zoned property that is adjacent to the site. A landscape buffer of substantial width should be provided adjacent to the delivery and loading area where it adjoins residential uses or zones. The landscape buffer should include evergreen shrubs and/or trees plus deciduous canopy trees at regular intervals, as appropriate, to provide light, and visual screening. If the delivery and loading spaces are located within an enclosed building or underground, no such setback and buffer area shall be required.

   (b) *Parking of Delivery Trucks* - Delivery trucks must not be parked in close proximity to or within a designated delivery or loading area during non-delivery hours with motor and/or refrigerators/generators running, unless the area where the trucks are parked is set back at least 50 feet from residential property to mitigate the truck noise.

   (c) *Screening* - The delivery and loading areas should be screened or enclosed so that they are not visible from public streets, public sidewalks, internal pedestrian walkways, or adjacent properties. The screen must be of masonry construction and at least ten feet (10') high, measured from the loading dock floor elevation, to screen the noise and activity at the loading dock.

9. *Ancillary Uses* – The applicant must demonstrate that any ancillary uses will not have negative impacts on adjacent residential uses, residentially zoned properties, or adjacent properties. Any ancillary use must be oriented to face

away from any residential use or residentially zoned property that is adjacent to the site.

10. *Noise Abatement* – A noise mitigation plan must be provided that indicates how the noise initiated by the land use will be mitigated to comply with noise regulations applicable in the City of Rockville. This includes compliance with the noise regulations set forth in Chapter 31B of the Montgomery County Code.

11. *Outdoor Lighting* – Outdoor lighting shall be in conformance with the *Landscaping, Screening and Lighting* manual.

12. *Landscaping* – Landscaping shall be in conformance with the *Landscaping Screening and Lighting* manual.

~~c. *Retail Store Size Limitations and Design and Site Development Guidelines for Retail Stores and Shopping Centers in MXTD and MXCD Zones*~~

~~1.*Limitation on Size of Retail Stores in MXTD and MXCD Zones*~~

~~(a) In MXTD and MXCD Zones, no retail establishment shall exceed 65,000 square feet of total gross floor area.~~

~~(b) Notwithstanding the foregoing, when an otherwise lawful retail establishment exists in the MXCD Zone as of (date of adoption), such structure is considered a development nonconformity but may be continued, structurally altered, repaired, or reconstructed so long as it is not increased, extended or enlarged beyond the gross floor area of the building that existed on (date of adoption). To the extent practicable, the design and site development guidelines of this Section must be applied to any alteration, reconstruction, or repair that takes place after (date of adoption).~~

~~2. *Design and Site Development Guidelines for Certain Developments in the MXTD and MXCD Zones* – Retail establishments containing greater than 25,000 square feet of gross floor area and shopping centers of any size, are subject to the design and site development guidelines contained in subsection c.1 and 2 above. These guidelines must be applied as part of the review and site plan approval. For developments in the MXCD Zone, which are also subject to the design guidelines Plan, if there is any conflict between the guidelines, the more restrictive guideline applies.~~

25.13.07 – Special Design Regulations for Individual Mixed-Use Zones

a. *Mixed-Use Transit District Zone (MXTD)* **–** The MXTD Zone is intended to foster the implementation of the relevant Master Plan recommendations for areas in close proximity to the Metro rail stations.

1. *Building Location* – In order to meet the intent of the Master Plan, buildings in the MXTD Zone should be located at the front property line(s), including corner lots, or the build-to line where established by the Plan. Access to the rear, if required, should be via alleys. If access is required from the front, the driveway entry should be a portal penetrating the façade of the building. The continuity of the building façade must be maintained above the drive entry.

2. *Uses by Floor* – The ground floor must contain retail or public-related service uses along those streets designated in the Master Plan as major pedestrian spines. Ground floor retail is the preferred use along other streets, but is not required. The ground floor must have a ceiling height of at least 15 feet. The upper floors may be additional retail, office, residential, or a combination of uses. If the

building contains only residential units, the ground floor may consist of residential units, but should be designed to facilitate conversion to retail or other commercial uses.

3. *Facade* – The façade design must be consistent with the guidelines set forth in Section 25.13.05.b.2(a). Where the façade height exceeds 35 feet, the façade should include an expression line above the first floor level and a defined cornice line at the top of the façade wall.

4. Fenestration – Generally, fenestration of the stories above the ground floor should be by individual framed windows. Continuous strip windows may be allowed by the Planning Commission if they are used to maintain compatibility with existing contiguous projects.

5. Sidewalks – Where sidewalks must be built new or rebuilt as part of redevelopment, they should comply with the provisions of Section 25.17.05.

6. Parking – On-site parking must be provided in accordance with the requirements of Article 16. Parking must be located to the side or in the rear of the buildings unless ground floor retail is provided, in which case limited parking may be allowed in the front to serve the retail uses. Structured parking, either above or below grade, is preferred. Any parking structure facades visible from the street or a transitway must be treated in the same manner as the primary building facades. All parking must be screened to prevent vehicle headlights from shining into adjoining residential properties.

b. *Mixed-Use Corridor District Zone* (*MXCD)* **–** This zone is intended for areas along major highway corridors in areas ~~beyond~~ near the ~~MXCD~~MXTD Zone. It allows for moderate density development of retail, office, service, and residential uses. Because of the nature of the locations where it is applied, the zone provides some flexibility in the siting of buildings relative to major highways to accommodate service drives and required parking.

1. *Building Location* – In order to meet the intent of the Plan, buildings in the MXCD Zone should be located at the front property line or the build-to line where established by the Plan. Access should be to the rear, via alleys with access from the side street(s).

2. *Uses by Floor* – The ground floor must contain retail or service uses dealing directly with the public along those streets designated in the Plan as major pedestrian spines. Ground floor retail is the preferred use along other streets, but is not required. The ground floor must have a ceiling height of at least 15 feet. The upper floors may be additional commercial, residential, or a combination of uses. If the building contains only residential units, the ground floor may

consist of residential units, but should be designed to facilitate conversion to retail or other commercial uses.

3. *Facades* – The façade design must be consistent with the guidelines set forth in Section 25.13.05.b.2(b). Where the façade height exceeds 35 feet, the façade should include an expression line above the first floor level and a defined cornice line at the top of the façade wall.

4. *Fenestration* - Generally, fenestration of the stories above the ground floor should be by ~~individual~~ framed individual windows. Continuous strip windows may be allowed by the Planning Commission if they are used to maintain compatibility with existing contiguous projects.

5. *Sidewalks* – Where sidewalks must be built new or rebuilt as part of redevelopment, they should comply with the provisions of Section 25.17.05.

6. *Parking* – On-site parking must comply with the standards and requirements of Article 16. Most parking should be located to the side or in the rear of the buildings. Structured parking, either above or below grade, is preferred. Any parking structure facades visible from the street or a transitway must be treated in a similar manner as the primary building facades. All parking ~~-~~must be screened to prevent vehicle headlights from shining into adjoining residential properties.

c. *Mixed-Use Employment Zone (MXE)* – This zone is intended for areas that are either currently developed or are recommended for development primarily for office and industrial park uses.

1. *Building Location* – Where recommended by the ~~Master~~ Plan, buildings in the MXE Zone should be located close to the front property line or at a build-to line (vis-a-vis, a service drive) where established by the Plan.

2. *Uses by Floor* – The ground floor may contain retail and other commercial uses along those streets designated in the ~~Master~~ Plan as major pedestrian spines. The upper floors may be additional retail, office, residential, or a combination of uses.

3. *Façade* – Along the front lot line, the building façade is normally a minimum of 20 feet high. Building facades taller than 35 feet should generally include an expression line at the first floor level, and a defined cornice line at the top of the façade wall.

4. *Sidewalks* – Where sidewalks must be built new or rebuilt as part of redevelopment, they should comply with the provisions of Section 25.17.05.

5. *Parking* – On-site parking must comply with the standards and requirements of Article 16. Most parking should be located to the side or in the rear of the buildings. Structured parking, either above or below grade, is preferred. Any parking structure facades visible from the street or a transitway must be treated in a similar manner as the primary building facades. All parking must be screened to prevent vehicle headlights from shining into adjoining residential properties.

6. *Special Regulations for Residential Development in the MXE Zone*

   (a) Residential uses may be allowed in those areas recommended for such uses in the relevant ~~Master~~ Plan, or where the Mayor and Council or the Planning Commission, as the case may be, determines that the use is compatible with adjoining and confronting uses by means of landscaping, screening, or other measures. In this case, residential development is limited to townhouses, multi-unit, or live-work units. Ground floor retail uses primarily intended to serve the residents may be included.

   (b) Residential uses are permitted in buildings containing principally office uses, but are limited to no more than 20% of the gross floor area.

   (c) In order to maintain compatibility, residential uses other than live-work units are not permitted in buildings that house primarily service industrial or other primarily industrial uses.

d. *Mixed-Use Business* Zone (*MXB)* – Except as may be otherwise determined by the Plan, this zone is intended for areas that are either currently developed or recommended for development primarily for community business and retail services.

   1. *Building Location* – Buildings in the MXB Zone should be located at or close to the front property line or the build-to line where required by the Master Plan.

   2. *Uses by Floor* - The ground floor must contain commercial or service uses. The upper floors may be additional commercial, residential, or a combination of uses. If the building contains only residential units, the ground floor may consist of residential units, but should be designed to facilitate conversion to retail or other commercial uses. This provision does not apply where the applicable Master Plan recommends residential uses only.

   3. *Façade* – Along the front lot line, the building façade is normally a minimum of 15 feet high. Variations of up to five (5) feet are encouraged to achieve some variety in the façade appearance. Taller heights at the front are allowed where determined appropriate in the Plan. Building facades taller than 35 feet should

include an expression line at the first floor level, and a defined cornice line at the top of the façade wall.

4. *Fenestration* - Fenestration is to be by ~~individual~~ framed individual windows. Continuous strip windows are discouraged unless they are used to maintain compatibility with existing contiguous projects.

5. *Sidewalks* – Where sidewalks must be built new or rebuilt as part of redevelopment, they should comply with the provisions of Section 25.17.05.

~~i.~~ 6. *Parking* – On-site parking must comply with the standards and requirements of Article 16. Most parking should be located to the side or in the rear of the buildings. Structured parking, either above or below grade, is preferred. Any parking structure facades visible from the street or a transitway must be treated in a similar manner as the primary building facades, and the ground level facing the street must be occupied by commercial or personal service uses. All parking must be screened to prevent vehicle headlights from shining into adjoining residential properties.

7. *Adjacent to Residential* – Where the MXB Zone confronts or is immediately adjacent to any property used or recommended in the Plan for single unit residential development, the architectural design of buildings adjoining, adjacent, or confronting such single unit residential uses should reflect ~~the~~ compatible design and character ~~of~~ with the existing residential buildings in the immediate vicinity.

e. *Mixed-Use Neighborhood Commercial* Zone (*MXNC)* – This zone is intended for areas that are either currently developed or recommended for development primarily for neighborhood retail services.

1. *Building Location* – Buildings in the MXNC Zone should be located at or close to the front property line or the build-to line where required by the Plan.

2. *Uses by Floor* - The ground floor may include both commercial and residential uses. The upper floors may ~~be~~ contain additional commercial, residential, or a combination of uses.

3. *Façade* – Along the front lot line, the building façade is normally a minimum of 15 feet high. Variations of up to five (5) feet are encouraged to achieve some variety in the façade appearance. Building facades taller than 35 feet should include an expression line at the first floor level, and a defined cornice line at the top of the façade wall.

4. *Fenestration* - Fenestration is to be by ~~individual~~ framed individual windows. Continuous strip windows are discouraged unless they are used to maintain compatibility with existing contiguous projects.

5. *Sidewalks* – Where sidewalks must be built new or rebuilt as part of redevelopment, they should comply with the provisions of Section 25.17.05.

6. *Parking* – On-site parking must comply with the standards and requirements of Article 16. Most parking should be located to the side or in the rear of the buildings. Structured parking, either above or below grade, is preferred. Any parking structure facades visible from the street must be treated in the same manner as the primary building facades. All parking must be screened to prevent vehicle headlights from shining into adjoining residential properties.

f. *Mixed-Use Commercial Zone (MXC)* – This zone is intended for areas that are either currently developed or recommended for development primarily for neighborhood retail services.

1. *Building Location* – Consistent with the operational characteristics of the use, buildings in the MXC Zone should be located close to the front property line or at the build-to line where required by the Plan.

2. *Uses by Floor* – Except in the case of single-unit detached residential buildings, the ground floor must contain commercial uses. The upper floors may ~~be~~ contain additional commercial, residential, or a combination of uses.

3. *Façade* – Along the front lot line, the building façade is normally a minimum of 15 feet high. Variations of up to five (5) feet are encouraged to achieve some variety in the façade appearance.

4. *Fenestration* – Fenestration of the upper floors is to be by ~~individual~~ framed individual windows. Continuous strip windows are discouraged unless they are used to maintain compatibility with existing contiguous projects.

5. *Sidewalks* – Where sidewalks must be built new or rebuilt as part of redevelopment, they should comply with the provisions of Section 25.17.05.

~~7.~~6. *Parking* – On-site parking must comply with the standards and requirements of Article 16. Parking should be located to the side or in the rear of buildings to the extent possible. Structured parking, either above or below grade, is preferred. Any parking structure facades visible from the street must be treated in the same manner as the primary building facades. All parking must be screened to prevent vehicle headlights from shining into adjoining properties.

g. *Mixed-Use Transition Zone (MXT)* – This zone is intended for areas that are located between medium and high-intensity development and single-unit dwelling detached residential neighborhoods. This zone allows for development of multi-unit and townhouse residential development, and may include neighborhood-serving retail uses.

1. *Building Location* – Buildings in the MXT Zone should be located at or close to the front property line or the build-to line where established by the Plan.

2. *Uses by Floor* – The ground floor may contain retail, public-related service, office, or residential uses. The upper floors may be additional retail, office, residential, or a combination of uses.

3. *Façade* – Building facades should be generally consistent with the façade designs in the immediate neighborhood. Roofs should have a pitch compatible with nearby single-unit residential development.

4. *Fenestration* - Fenestration is to be by framed individual ~~framed~~ windows. Continuous strip windows are discouraged unless they are used to maintain compatibility with existing contiguous projects.

5. *Sidewalks* – Where sidewalks must be built new or rebuilt as part of redevelopment, they should comply with the provisions of Section 25.17.05.

6. *Parking* – On-site parking must comply with the standards and requirements of Article 16. Most parking should be located to the side or in the rear of the buildings. Structured parking, either above or below grade, is preferred and may not be visible from a public street. Any parking structure facades visible from the street must be treated in the same manner as the primary building facades. All parking must be screened to prevent vehicle headlights from shining into adjoining residential properties.

7. *Adjacent to Residential* – Where the MXT Zone is opposite or immediately adjacent to any property zoned or recommended in the ~~Master~~ Plan for single-unit detached residential development, the architectural design of buildings adjoining or confronting one-family residential uses should reflect the design and character of the existing residential buildings in the immediate vicinity.

~~25.13.08 – Performance Standards~~

~~In order to assure compatibility between residential development and other types of uses sharing a common building or within a multi-building project, the following performance standards must be met:~~

~~1.*Noise* – Noise standards must comply with the regulations set forth in Chapter 31B of the Montgomery County Code.~~

~~2.*Vibration*~~

~~(a) Within a building or use, operation or activity is allowed to cause or create earthborn steady state vibrations in excess of the peak particle velocities of the following:~~

~~(i)Within a building: 0.02~~

~~(ii)At the lot line: 0.05~~

~~(b)Impact vibrations may be twice the above levels.~~

~~(c)Between the hours of 8 PM and 7 AM, all permissible vibration levels must be reduced to one-half (1/2) the indicated values.~~

~~3. *Lighting* – Lighting must comply with the manual.~~

~~4. *Odors* – No odors generated by other uses in a building can penetrate into the residentially-developed portion of the building.~~

~~5. *Open Area* - Open area provided on the site must be arranged in a manner that is suitable for active or passive recreational use by residents, employees, and/or the public. Open area, where applicable and permitted, may be used to satisfy the requirements of the Forest and Tree Preservation Ordinance.~~

25.13.~~09~~ 08 – Accessories

All ~~accessories~~ accessory uses, building and structures within mixed-use zones must comply with the provisions of Article 9 of this Chapter.

25.13.~~10~~ 9 – Nonconformities

All nonconforming uses and structures within ~~mixed~~Mixed-~~use~~ Use ~~zones~~ Zones must comply with the provisions of Article 8 of this Chapter.

25.13.~~11~~ 10 – Parking and Loading Requirements

All parking and loading within ~~mixed~~Mixed-~~use~~ Use ~~zones~~ Zones must comply with the provisions of Article 16 of this Chapter

25.13.~~12~~ 11 - Landscaping and Buffer Requirements

All landscaping and buffering within ~~mixed~~Mixed-~~use~~ Use ~~zones~~ Zones must comply with the provisions of Article 17 of this Chapter and, where applicable, the Forest and Tree Preservation Ordinance.

25.13.~~13~~ 12 – Signs

All signs within ~~mixed~~Mixed-~~use~~ Use ~~zones~~ Zones must comply with the provisions of Article 18 of this Chapter.

Article 14 – Special Zones

25.14.01 – Historic District Zones

a. *Purpose* –The Historic District Zone~~s~~ is an ~~are~~ overlay zone~~s~~ whose purpose is to:

1. Safeguard the heritage of the City by preserving sites, structures, or areas which reflect elements of cultural, social, economic, political, archaeological, or architectural history;

2. Stabilize and improve the property values of those sites and structures, and the adjacent neighborhood;

3. Foster civic beauty;

4. Strengthen the local economy; and

5. Promote the preservation and the appreciation of those sites and structures for the education and welfare of the residents of the City.

b. *Location*

1. *Underlying Zoning* - The Historic District Regulations are in addition to the underlying residential or nonresidential zoning regulations.

2. *Established Location* – The Historic District Zones are depicted on the zoning map incorporated into these regulations in Article 2.

3. *Future Location* – The Mayor and Council may establish, change, layout, and define future Historic District Zones which are of local, state, or national or historical, archaeological, or architectural significance.

c. *Historic District Commission* – The Historic District Commission is subject to the provisions of Article 25.04.04.

d. *Designation of Properties*

1. *Initiation of Process* – The process of evaluating a property for possible historic designation due to its historic, archaeological, or architectural significance begins upon the occurrence of any of the following:

(a) The filing of an application nominating the property for historic designation by one (1) or more of the following:

(i) The property owner;

(ii) The Historic District Commission;

(iii) The Mayor or Council;

(iv) The Planning Commission; or

(v) Any other person;

(b) The filing of an application by the property owner requesting the evaluation of the property for eligibility for historic designation~~historic, archaeological, or architectural significance of the property~~; or

(c) The filing of an application for a demolition permit for any property; or

(d) The filing of a Natural Resources Inventory identifying a potentially significant historic resource.

2. *Application Review* – Upon the filing of an application for nomination, evaluation, or demolition, the Chief of Planning must evaluate the subject property for compliance with the City's criteria for historic designation, and make a recommendation to the Historic District Commission.

3. *Historic District Commission ~~Public Meeting~~ Review and Decision* – The Historic District Commission will ~~hold~~ consider the application at a meeting of the Commission following notice given in accordance with the ~~a public meeting in compliance with the~~ notice provisions of Section 25.05.03, ~~to review the historical, archaeological, and architectural significance of the~~ site to determine if the property~~it~~ meets the adopted City of Rockville Historic District Designation Criteria. If the Historic District Commission finds that a ~~nominated~~ site meets the criteria to be eligible for historic designation, it will make a written recommendation that the Mayor and Council rezone the property to the Historic District Zone ~~designate the site as historic~~.

4. *Mayor and Council Authorization* – Upon receipt of the Historic District Commission's recommendation, the Mayor and Council may authorize the filing of a sectional map amendment to place the property in the Historic District Zone.

5. *Completion of Designation Process* – The designation process shall be complete upon the occurrence of any of the following:

(a) The determination of the Historic District Commission, ~~as part of its review of an application for historic nomination, historic evaluation, or demolition permit,~~ that the property does not meet the criteria for historic designation; or

(b) The determination of the Mayor and Council not to authorize the filing of a sectional map amendment for historic rezoning;

(~~b~~c) The determination of the Mayor and Council to take final action to grant or deny a map amendment for historic rezoning.

~~6. *Restrictions on Property During Interim Historic Review Period* – No exterior change may be made to any property that is the subject of an application for nomination, evaluation, or demolition permit under this Section until the designation process is complete, unless the property owner first obtains a Certificate of Approval from the Historic District Commission in accordance with the provisions of subsection e of this Section and Section 25.04.04. The restriction of this subsection will not apply for more than 210 days from the date of the filing of the application that initiated the historic designation process.~~

~~e.*Exterior Changes to Structures* – A person must file an application for a Certificate of Approval with the Historic District Commission before they may construct, alter, reconstruct, move, or demolish a site or structure located within a designated Historic District Zone. An application for a Certificate of Approval is also required for properties that have been cited for demolition by neglect.~~

~~1. *Consideration at Historic District Commission Meeting* - The application will be considered at a meeting of the Historic District Commission. Notice must be provided in compliance with the provisions of Section 25.05.03.~~

~~2. *Factors for Consideration in Reviewing Application* – In reviewing the plans for any such construction or change, the Historic District Commission will give consideration to:~~

~~(a) The effect of the proposed changes on the general character of the designated Historic District, weighing their impacts on the integrity of the structures on the property and the related environmental setting;~~
~~(b) The historic and aesthetic compatibility of the proposed alterations with historically significant structures;~~

~~(c) Any other factors, including aesthetics, which the Historic District Commission considers pertinent;~~

~~(d) The following sources of design review:~~

~~(i)Senkevitch, Anatole, Jr., "Adopted Architectural Design Guidelines for the Exterior Rehabilitation of Buildings in Rockville's Historic Districts," Adopted 1997;~~

~~(ii) U.S. Secretary of the Interior's Standards and Guidelines for Archaeology and Historic Preservation, as amended; and~~

~~(iii) City of Rockville: Technical Guides for Exterior Alterations, Adopted 2004; and~~

~~(e) Any other factors provided in Article 66B, Chapter 8 of the Maryland Code~~

~~3. *Filing of Decision; Notification* – The Historic District Commission must file with the Chief of Planning a Certificate of Approval, modificationorrejection of all applications and plans submitted to it for review. Notification of the Commission's decision must be provided in accordance with Section 25.05.06.~~

~~4. *Building Permit* – No building permit may be issued for any exterior change to any property in the Historic District until a Certificate of Approval has been filed with the Chief of Planning.~~

~~f. *Incorporation of Maryland Law* – All other provisions and subsequent modifications of Maryland Law, 66B, Chapter 8 are incorporated into this Article by reference.~~

25.14.02 – Neighborhood Conservation Districts

a. *Purpose* – The Neighborhood Conservation Districts are overlay districts intended to provide a vehicle to implement programs for the revitalization or conservation of older areas or districts within the City possessing distinctive features, identity, or character worth retention and enhancement.

f. *Effect*

1. Each Neighborhood Conservation District will take effect through:

(a) Adoption of a Neighborhood Conservation Plan and a set of guidelines that will facilitate maintenance and protection of the neighborhood character; and

(b) The implementation of such plan and guidelines through the creation of a Neighborhood Conservation District Zone.

2. The regulations of the Neighborhood Conservation District Zone are in addition to the regulations of the base zone in which the neighborhood area is located.

f. *Neighborhood Conservation Plan* – The adoption of a Neighborhood Conservation Plan may be accomplished through one (1) of the following procedures:

1. *Master Plan* – As part of the consideration of a Master Plan or Master Plan amendment, the Mayor and Council may identify one (1) or more areas for designation as a Neighborhood Conservation District and adopt a set of guidelines for each such district. Such districts may only be designated as set forth in subsection 2.e below.

2. *Local Initiative* – Local property owners may petition the Mayor and Council to initiate a Neighborhood Conservation District study.

(a) In order to be considered for initiation of the study, at least 40% of the property owners within the proposed conservation district must support the initiation of the process in writing.

(b) The Planning Commission will review the proposed conservation district proposal and provide a recommendation to the Mayor and Council.

(c) The Mayor and Council may decline to authorize a study based on owner opposition, community input, and the significance of the property to the City.

~~(a)~~(d) If the Mayor and Council authorizes a study to proceed, the study will commence under the procedures established for preparing a Plan. ~~processing a Master Plan amendment.~~

(e) Prior to final action by the Mayor and Council on the proposed Neighborhood Conservation Plan, at least 85% of the property owners within the proposed Neighborhood Conservation District must demonstrate their support in writing for the proposed designation.

f. *Location*

1. *Boundaries Correspond to Plan Boundaries* – The boundaries of each Neighborhood Conservation District are the boundaries outlined in the applicable Neighborhood Conservation Plan.

2. *Designation on Map* – Neighborhood Conservation Districts must be designated on the zoning map incorporated into these regulations under the provisions of Article 2.

e. *Designation of New District* – Following the adoption of a Neighborhood Conservation Plan, the Mayor and Council may authorize the filing on its behalf of:

1. A Text Amendment Application, pursuant to Section 25.06.02, establishing a Neighborhood Conservation District and establishing regulations therefore, and

2. A Sectional Map Amendment Application, pursuant to Section 25.06.01, to place the designated neighborhood in the Neighborhood Conservation District.

f. *Conflict of Regulations* – In the event of a conflict between the provisions of a specific Neighborhood Conservation District Zone and the base zone regulations, the provisions of the Neighborhood Conservation District Zone will control.

25.14.03 – Lincoln Park Neighborhood Conservation District

a. *Development Standards for Lots* – Lots within the Lincoln Park Conservation District are subject to the following development standards:

1. Assemblage of separate lots for new development is not permitted;

2. Resubdivision of existing original lots is not permitted; and

3. New pipestem lots are not permitted.

b. *Standards for New Construction*

1. New construction or additions must conform to all other applicable building code and safety regulations of the City of Rockville as well as the Lincoln Park Neighborhood Conservation District Standards. A City of Rockville building permit is required for all construction.

2. The lot coverage will be 25% of the maximum square footage of the smallest new lot size permitted, 6,000 square feet. This allows 1,500 square feet of

combined lot coverage, which would include the house footprint and any detached accessory structures such as a garage or garden shed. The lot coverage includes the total of all roofed structures including garages and sheds.

3. The maximum actual height of new construction, a building, or addition, is 25 feet from the existing grade to the ~~ridgeline~~peak of the roof. A 29-foot height may be permitted for designs using a graduated 45-degree line of sight slope from the front property line to the highest point of the new construction. A front porch or a substantial portico to visually separate the stories on the front elevation wall would satisfy this requirement.

4. New buildings should follow prevailing irregular setback patterns and not line up in a row. A two (2) to five (5) foot deviation from an adjacent structures' front setback is recommended. The minimum front setback is 25 feet.

5. Infill new house construction should be designed so that the organization of the street-facing façades closely relates to any surrounding buildings.

6. Additions should be constructed on the rear of the building or on a side, whichever has less impact on the character of the structure and streetscape.

7. Roof heights of new additions should not dominate original rooflines. A graduated 45 degree line of sight slope from the front property line to the highest point of the addition may be acceptable with an appropriate design.

8. Materials and design elements for new construction or additions should be selected that are sympathetic with surrounding ~~historic~~ buildings in the zone.

9. Mechanical systems should be incorporated into new construction in an inconspicuous manner.

c. *Lot Coverage Standard for Additions to Existing One-Story Homes* – If an existing one-story house is retained, an addition to bring total lot coverage up to 35% of the smallest lot size available or to 2,100 square feet is permitted. However, the total of the addition cannot exceed the present total square footage of the house without obtaining a new single-unit dwelling permit.

d. *Streets*

1. New streets and private access driveways that function as streets are not permitted.

2. Cul-de-sacs accessing structures set back from the main roads are not permitted.

e. *Variance Conservation District Standards* – Requests for a variance from the Lincoln Park Conservation District Standards are processed by the City of Rockville Board of Appeals in the same manner as a variance from other regulations of this Chapter are processed.

25.14.04 – Reserved

25.14.05 - Reserved

25.14.06 –Park Zone

a. *Purpose* – The purposes of the Park Zone of the City are to:

1. Provide and maintain adequate open space areas within the City to insure that conservation, safety, and recreational needs, both active and passive, are met;

2. Enhance the visual, economic, and environmental character of the community; and

3. Enhance the appearance and value of neighborhoods through the preservation of natural features, and the provision of recreation areas and open space;

b. *Zone Established*

Type of Zone	Distinguishing Feature	Name of Zone
Park Zone	A zone placed on all City parks and recreation areas ~~and public school sites~~ to provide for open space, recreational, and other compatible uses.	Park Zone ("PZ")

c. *Land Use Table* – The uses allowed in the Park Zone are as shown in the table below.

d. Uses are subject to applicable conditions of site plan approval.

e. All special exceptions are subject to the requirements of Article 15.

f. Key: P = Permitted Use; S = Special Exception; C = Conditional Use; Blank = Not Permitted

	Uses	Zone Park Zone	Conditional requirements or related regulations
a. Residential uses	Dwelling, single unit detached	C	Permitted for caretaker's residence
b. Swimming pools	Non-accessory	C	City-owned or operated facilities only
c. Institutional uses	Cemetery	P	
	Charitable or philanthropic institution	S	See Sec. 25.15.02.e
	Private club	S	
	Public utility building and/or structure	S	See Sec. 25.15.02.n
	Publicly-owned or publicly-operated buildings and uses, excluding sanitary landfills	C	Subject to a Level 3 Site Plan (Sec. 25.07.05) and the landscaping and screening provisions of Art. 17.
d. Miscellaneous uses	Wireless communication facility entirely within an existing building, or on the roof or side of a building, or attached to an existing structure	C	Conditional use subject to the requirements of Sec. 25.09.08
Miscellaneous uses (con't)	Wireless communication facility not located entirely within an existing building, or on the roof or side of a building, or attached to an existing structure, including, but not limited to antennas on a freestanding ground mounted antenna support structure	S	See Sec. 25.09.08; 25.15.02.s
	Athletic field, picnic area, public pool, exercise court, and related active and passive recreational facilities with associated accessory uses and structures, and support uses such as stormwater control facilities.	P	
e. Accessories		P	See Secs. 25.09.01, and .02

g. *Development Standards* – The development standards of this zone are those development standards of the lowest density adjoining single dwelling unit residential zone, except as may be otherwise recommended in an applicable Plan.~~recommended for each individual park or recreation area of the City by the City Parks, Recreation, and Open Space Plan as adopted and amended by the Mayor and Council.~~

25.14.07 – Planned Development Zones

a. *Purposes* – Prior to _____ [effective date], developments with special provisions for development standards and types of uses were approved through several types of special development procedures (Comprehensive Planned Development, Planned Residential Unit, Preliminary Development Plan, I-3 Zone Optional Method, etc.). Under these procedures, the development approved may have little or no relation to the underlying zone or zones. In order to more clearly identify such planned developments~~approved development nd to ease the administration of these properties in the land records~~, these ~~special~~ developments are each being placed in their own Planned Development Zone, and the Initial Approving Documents~~. As such, the resolutions of approval adopted by the Mayor and Council and the Preliminary Development Plans approved by the Planning Commission, along with any accompanying documents, any subsequent amendments thereto, and related development standards,~~ are included by reference in the respective Planned Development Zones. In addition, one (1) or more equivalent zones are designated for each Planned Development Zone.

b. *Uses*

1. Only those uses specifically permitted by the initial approving documents ~~any of the following~~ are allowed in a Planned Development Zone:

~~(a) The resolution of approval or an approved preliminary development plan; or~~

~~(b) The provisions of the Zoning Ordinance in effect and applicable to the particular planned development at the time of the resolution of approval or approved preliminary development plan.~~

2. Notwithstanding the provisions of subsection 25.14.07.b.1. above, the Mayor and Council, in connection with an amendment to an approved Planned D~~d~~evelopment ~~plan~~, may allow one (1) or more of those uses set forth in the equivalent zone specified for those areas of the Planned D~~d~~evelopment ~~plan~~ designated for nonresidential uses.

c. *Zones Established*

1. *Principally Single-Unit Residential Developments* – The following are principally single-unit residential Planned D~~d~~evelopments in the City:

(a) PD-RS – Rockshire;

(b) PD-FM – Fallsmead;

(c) PD-FM2 – Fallsmead 2;

(d) PD-FB – Fallsbend;

(e) PD-CH – Carter Hill;

(f) PD-BA – Barnside Acres;

(g) PD-FL – Flint Ledge Estates;

(h) PD-RH – Rose Hill;

(i) PD-RHF – Rose Hill Falls;

(j) PD-BU – Buckingham Property.;

(k) PD-CL – Chestnut Lodge;

(l) PD-NM – New Mark Commons;

(m) PD-DF – Dawson Farm;

(n) PD-MH – Meadow Hall;

(o) PD-RF – Redgate Farm; and

(p) PD-LG – Legacy at Lincoln Park.

2. *Principally Mixed-Use Residential and Commercial Development* - The following are principally mixed-use residential and commercial developments in the City:

(a) PD-KF – King Farm;

(b) PD-FG – Fallsgrove;

(c) PD-UR – Upper Rock;

(d) PD-TO – Tower Oaks;

(e) PD-KSI – KSI Apartments;

(f) PD-TC – Twinbrook Commons;

(g) PD-RCI – Rockville Center, Inc.; and

(h) PD-TS – Town Square.

3. *Principally Commercial Development* - The following are principally commercial developments in the City:

(a) PD-SG – Shady Grove;

(b) PD-MC – Metro Center; and

(c) PD-CB – Champion Billiards.

d. *Development Standards*

~~1.~~1. *General Policy* - The Planned D~~d~~evelopments ~~projects~~ located in the z~~Planned Development Z~~ones were approved by the Mayor and Council or Planning Commission as a unified, coherent design. Depending on the project, the development standards may, or may not, have been specified in the project approvals. In some instances the development standards of the underlying zone ~~as set forth in the~~ in effect at the time~~previous ordinance~~,of approval applied to some aspects of the development project, and were not restated in the project approval. In addition, a number of the projects are subject to annexation agreements or development agreements with the City that have specific terms for how the development will proceed. All of these documents constitute the Initial Approving Documents as defined in §25.03.02.

~~3.~~2. *Approved Development Standards* - The development standards (including, but not limited to, those standards for building heights, setbacks, lot coverage, lot sizes, density, and open space) set forth in the ~~r~~Initial Approving Documents~~esolution of approval, approved Preliminary Development Plan, approved use permit, or approved detailed application~~ apply to the following:

(a) Completed Planned Development projects;

(b) Completed or unbuilt portions of Planned Developments ~~projects~~;

(c) Replacement in kind ~~in~~ of any completed portion of a ~~planned~~ Planned ~~development~~ Development~~projects or completed portions of such development projects~~; ~~and~~

3. *Equivalent Zone Development Standards* - ~~ApprovalWhere, in the determination of the Approving Authority, the resolution of approval or approved Preliminary Development Plan does not provide specific standards~~,

The development standards ~~for~~ of the equivalent zone designation for ~~each~~ Planned Development Zone apply ~~to~~

~~4.~~(a) In the absence in the Initial Approving Document of specific development standards related to minium setbacks, maximum building height, lot coverage or lot dimensions:

(b) To that portion of an approved Planned Development Plan for which a major amendment to the Initial Approving Documents is sought unless waived in accordance with subsection 25.14.07d.5.

(c) Redevelopment of any portion of a Planned Development.

~~(a) Any portion of a Planned Development project that does not have either an approved use permit or an approved detailed application, or~~

~~(b) Any portion of a Planned Development project for which an amendment to an approved use permit or detailed application is sought.~~

~~Portions of a Planned Development project where construction has not commenced but where a use permit or detailed application has been approved as of _____ [effective date]. Implementation of an approved use permit or detailed application may proceed unless those approvals expire without implementation.~~

~~*Development Standards for Amendment to a Planned Development Approval*~~

(d~~a~~) The development standards for the equivalent zone will supersede the development standards contained in the ~~r~~Initial Approving Documents~~esolution of approval or the approved Preliminary Development Plan~~ for only that portion of the Planned D~~d~~evelopment ~~plan~~ subject to the amendment, or redevelopment.

~~(b) Subject to the provisions of subsection 25.14.07.d.6.(c), nothing herein shall preclude the Mayor and Council from applying certain standards of the equivalent zone to the entire Planned Development project if, pursuant to subsection 25.14.07.d.6. below, the portion of the development plan being amended is not required to comply with all of the development standards of the equivalent zone.~~

~~5.~~4. *Waiver of Equivalent Zone Standards*- The Approving Authority may waive the application of one (1) or more of the development standards of the designated equivalent zone upon a finding that the applicant has shown good cause as to why the development standard should not apply to any portion of the Planned Development project. In determining whether the burden of establishing good cause has been met, the Approving Authority must consider the following:

(a) Whether the development standard of the equivalent zone is consistent with the completed portion of the Planned Development ~~project~~;

(b) Whether applying the development standard of the equivalent zone is consistent with good planning and design principles;

(c) Whether applying the development standard of the equivalent zone is aesthetically pleasing;

(d) Whether applying the development standard of the equivalent zone is ~~technically~~ reasonably and practically feasible. (The cost of applying the standard alone, shall not constitute a reasonable practical difficulty.) and;

~~(g)~~(e) Such other factor as the Approving Authority deems appropriate.

~~6.~~*e. Amendment of a Planned Development*

1. ~~*When*~~ *Required, General* – -Any change in the provisions of the Initial Approving Documents ~~of the following proposed changes to a Planned Development project~~ will require approval of a Planned D~~d~~evelopment ~~plan~~ amendment by the Mayor and Council.~~:~~

   ~~(i) Any increase in the intensity of the development (dwelling units, gross square footage, etc.)~~

   ~~(ii)Any increase in building heights~~

   ~~(iii)Types of uses not previously approved;~~

   ~~(iv)A major relocation of public streets;~~

   ~~(v)A reduction or expansion of public or private open space; and~~

   ~~(vi)Such other proposed change in the project that the Planning Commission determines to be of such significance as to require an amendment to the development plan.~~

2. *Procedure* - Any proposal to amend ~~a~~the Initial Approving Documents of a previously approved ~~planned~~ Planned ~~development~~ Development ~~plan (exploratory plan, concept plan, or preliminary development plan)~~ requires the filing of a ~~development~~ project plan amendment application with the Chief of Planning. Such application must comply, and will be processed

in accordance, with the requirements for a project plan as set forth in Article 7 of this Chapter.

3. *Limitations* – Amendments to a the Initial Approving Documents of a ~~planned~~ Planned ~~development~~ Development ~~project approved by the Mayor and Council~~ shall be limited to the substance or area encompassed by the amendment application and may not affect other aspects of the approved planned development project without the consent of the applicant. Nothing, however, shall preclude the Mayor and Council from considering all aspects or areas of the approved planned development project in determining whether or not the requested amendment is appropriate.

(4) Major Planned Development Amendment. The following are major Planned Development Amendments subject to the Equivalent Zone development standards.

(a) Any increase in the intensity of the development (dwelling units, gross square footage, etc.) beyond what is authorized in the Initial Approving Documents;

(b) Any increase in building heights beyond what is authorized in the Initial Approving Documents**;**

(c) Types of uses not approved in the Initial Approving Douments;

(d) A major relocation of public streets;

(e) A material reduction in the cumulative amount of public or private open space; and

(f) Such other proposed change in the project that the Planning Commission determines to be of such significance as *be a substantial deviation from the Initial Approving Douments and therefore* require a major amendment to the development plan.

f.~~7~~. *Site Plan Required* –The implementation of an approved Planned Development~~development consistent with the approved development plan will~~ requires approval of a site plan in accordance with the requirements set forth in Article 7. ~~The Chief of Planning will determine the level of review required, based on the nature and complexity of the proposed site plan.~~

25.14.08 – PD-RS (Rockshire)

a. *Exploratory Application Approved* - The PD-RS Zone is regulated in accordance with the exploratory application approved by the Mayor and Council by Resolution No. 21-66 on March 7, 1966, as may be amended.

b. *Designated Equivalent Zones*

1. Designated equivalent zone (commercial development areas only): Mixed-Use Neighborhood Center (MXNC).

2. Designated equivalent residential zones:

(a) Single unit residential detached areas: R-60;

(b) Single unit residential attached areas: RMD-10.

25.14.09 – PD-FM (Fallsmead)

a. *Planned Residential Unit Approved* - The PD-FM Zone is regulated in accordance with the ~~Planned Residential Unit PRU1966-00003~~ exploratory application approved by the Mayor and Council by Resolution No. 2-66 on January 3, 1966, as may be amended.

b. *Designated Equivalent Zone* - Designated equivalent residential zone: R-60.

25.14.10 – PD-FM2 (Fallsmead 2)

a. *Planned Development Approved* - The PD-FM2 Zone is regulated in accordance with the exploratory application approved by the Mayor and Council by Resolution No. 17-81 on June 29, 1981, as may be amended.

b. *Designated Equivalent Zone* - Designated equivalent residential zone: R-60.

25.14.11 – PD-FB (Fallsbend)

a. *Planned Development Approved* - The PD-FB Zone is regulated in accordance with the exploratory application approved by the Mayor and Council by Resolution No. 12-80 on May 12, 1980, as may be amended.

b. *Designated Equivalent Zone* - Designated equivalent residential zone: R-60.

25.14.12 – PD-CH (Carter Hill)

a. *Planned Development Approved* - The PD-CH Zone is regulated in accordance with the exploratory application ~~(PRU-9-69)~~ approved by the Mayor and Council by Resolution No. 48-69 on August 4, 1969, as may be amended.

b. *Designated Equivalent Residential Zones* –

1. Single unit detached residential areas: R-60.

2. Single unit attached residential areas: RMD-10

25.14.13 – PD-BA (Barnside Acres)

a. *Planned Development Approved* - The PD-BA Zone is regulated in accordance with the exploratory application ~~(PRU-13-72)~~ approved by the Mayor and Council by Resolution No. 42-73 on September 10, 1973, as may be amended.

b. *Designated Equivalent Residential Zones* –

1. Single unit detached residential areas: R-60.

2. Single unit attached residential areas: RMD-10

~~b. *Designated Equivalent Zone* - Designated equivalent residential zone: R-60.~~

25.14.14 – PD-FL (Flint Ledge Estates)

a. *Planned Development Approved* - The PD-FL Zone is regulated in accordance with the exploratory application approved by the Mayor and Council by Resolution No. 13-81 on June 1, 1981, as may be amended.

b. *Designated Equivalent Residential Zones* –

1. Single unit detached residential areas: R-60.

2. Single unit attached residential areas: RMD-10

~~b. *Designated Equivalent Zone* - Designated equivalent residential zone: R-60.~~

25.14.15 – PD-RH (Rose Hill)

a. *Planned Development Approved* - The PD-RH ~~(Rose Hill)~~ Zone is regulated in accordance with the exploratory application approved by the Mayor and Council by Resolution No. 32-97 on December 8, 1997, as may be amended.

b. *Designated Equivalent Zone* - Designated equivalent residential zone: R-60.

25.14.16 – PD-RHF (Rose Hill Falls)

a. *Planned Development Approved* - The PD-RHF Zone is regulated in accordance with the exploratory application approved by the Mayor and Council by Resolution No. 3-90 on January 23, 1990, as may be amended.

b. *Designated Equivalent Residential Zones* –

1. Single unit detached residential areas: R-60.

2. Single unit attached residential areas: RMD-10

~~b. *Designated Equivalent Zones* - Designated equivalent residential zones:~~

~~1.Single-unit residential detached dwellings areas: R-60;~~

~~2.Single-unit residential attached areas: RMD-10.~~

25.14.17 – PD-BU (Buckingham Property)

a. *Planned Development Approved* - The PD-BU~~P~~ Zone is regulated in accordance with the exploratory application ~~(PRU2001-00020)~~ approved by the Mayor and Council by Resolution No. 19-02 on October 14, 2002.

b. *Designated Equivalent Zone* - Designated equivalent residential zone: R-90.

25.14.18 – PD-CL (Chestnut Lodge)

a. *Planned Development Approved* - The PD-CL ~~(Chestnut Lodge)~~ Zone is regulated in accordance with the exploratory application approved by the Mayor and Council by Resolution No. 3-06 on February 6, 2006, as may be amended.

b. *Designated Equivalent Zones –*

1. Single unit detached residential areas: R-90.

2. Historic Lodge: RMD-15

~~b. *Designated Equivalent Zone* - Designated equivalent zone for the historic lodge: RMD-10 15.~~

25.14.19 – PD-NM (New Mark Commons)

a. *Planned Development Approved* - The PD-NM Zone is regulated in accordance with the exploratory application ~~(PRU1966-00005)~~ approved by the Mayor and Council by Resolution No. 4-66 on January 10, 1966, as may be amended.

b. *Designated Equivalent Zones –*

1. Single unit detached residential areas: R-60.

2. Single unit attached residential areas: RMD-10

~~b. *Designated Equivalent Zone* - Designated equivalent single-unit residential zone: R-60.~~

25.14.20 – PD-DF (Dawson Farm)

a. *Planned Development Approved* - The PD-DF Zone ~~(Dawson Farm)~~ is regulated in accordance with the exploratory application (PRU-14-79) approved by the Mayor and Council by Resolution No. 7-80 on April 21, 1980, as may be amended.

b. *Designated Equivalent Zones –*

1. Single unit detached residential areas: R-60.

2. Single unit attached residential areas: RMD-10

~~b. *Designated Equivalent Zone* - Designated equivalent single-unit residential zone: R-60.~~

25.14.21 – PD-MH (Meadow Hall)

a. *Planned Development Approved* - The PD-MH Zone is regulated in accordance with the exploratory application (PRU-1-65) approved by the Mayor and Council by Resolution No. 62-65 on August 23, 1965, as may be amended.

b. *Designated Equivalent Zone* - Designated equivalent ~~single-unit~~ residential zone: RMD-10.

25.14.22 – PD-RF (Redgate Farm)

a. *Planned Development Approved* - The PD-RF Zone is regulated in accordance with the exploratory application approved by the Mayor and Council by Resolution No. 14-67 on March 13, 1967, as may be amended.

b. *Designated Equivalent Zone* - Designated equivalent residential zone: ~~RMD-10.~~

1. Single unit attached residential areas: R-60

2. Single unit attached residential areas: RMD-10

25.14.23 – PD-LG (Legacy at Lincoln Park)

a. *Planned Development Approved* - The PD-LG Zone is regulated in accordance with the exploratory application approved by the Mayor and Council by Resolution No. 3-05 on January 10, 2005, as may be amended.

b. *Designated Equivalent Zones* - Designated equivalent zone: ~~RMD-10~~.

1. Single unit attached residential areas: R-60

2. Single unit attached residential areas: RMD-10

25.14.24 – PD-KF (King Farm)

a. *Planned Development Approved* - The PD-KF Zone is regulated in accordance with the exploratory application approved by the Mayor and Council by Resolution No. 10-96 on July 8, 1996, as may be amended.

b. *Designated Equivalent Zones* - Designated equivalent zones:

1. For areas developed with office and institutional uses: Mixed-Use Employment Zone (MXE);

2. For areas developed with multi-unit residential dwellings: RMD-25 Zone;

3. For areas developed with single-unit attached or townhouse dwellings: RMD-10;

4. For areas developed with single-unit detached residential dwellings: R-60; and

5. For areas developed with retail commercial uses: Mixed-Use Neighborhood Commercial Zone (MXNC).

25.14.25 – PD-FG (Fallsgrove)

a. *Planned Development Approved* - The PD-FG (Fallsgrove) Zone is regulated in accordance with the concept plan approved by the Mayor and Council by Resolution 1-00 on February 22, 2000 and amended by Resolution No. 21-05 on August 1, 2005, as may be amended.

b. *Designated Equivalent Zones* - Designated equivalent zones:

1. For areas developed with office and institutional uses: Mixed-Use Employment Zone (MXE);

2. For areas development with multi-unit residential dwellings: RMD-25 Zone;

3. For areas developed with single-unit attached and townhouse dwellings: RMD-10;

4. For areas developed with single-unit detached dwellings: R-60; and

5. For areas developed with retail commercial uses: Mixed-Use Neighborhood Commercial Zone (MXNC).

25.14.26 – PD-UR (Upper Rock)

a. *Planned Development Approved* - The PD-UR Zone is regulated in accordance with the preliminary development plan approved by the Mayor and Council by Resolution No. 14-05 on May 23, 2005, as may be amended.

b. *Designated Equivalent Zones* - Designated equivalent zone~~:~~ Mixed-Use Employment Zone (MXE).

c. Development standards shall be ~~that development~~ those approved by the Mayor and Council as set forth in the Resolution and as shown on the Preliminary Development Plan (PDP), notwithstanding any contrary development standard for the I-3 Optional Method of Development in effect at the time of the adoption of the Resolution. Minimum building setbacks for streets internal to the Preliminary Development Plan area are as set forth in Exhibit 4 to the PDP Resolution, as may be amended. No setbacks are required from lot lines or property lines that are not external boundaries of the PDP area. There are no standards for minimum lot size and minimum lot width for record lots, provided that they conform to the blocks shown in the approved PDP. Any lot platted as an ownership lot may be re-platted as a record lot.

25.14.27 – PD-TO (Tower Oaks)

a. *Planned Development Approved* - The PD-TO ~~(Tower Oaks)~~ Zone is regulated in accordance with the concept plan approved by the Mayor and Council by Resolution No. 25-87 on October 12, 1987, as amended by Resolution No. 21-93 (approved September 27, 1993), and as further amended by Resolution No. 1-01 (approved January 8, 2001), as may be amended.

b. *Designated Equivalent Zones* - Designated equivalent zones:

1. For areas developed with office and institutional uses: Mixed-Use Employment Zone (MXE);

2. For areas ~~development~~ developed with multi-unit residential dwellings: RMD-25 Zone;

3. For areas developed with single-unit attached and townhouse dwellings: RMD-10; and

4. For areas developed with retail commercial uses: Mixed-Use Neighborhood Commercial Zone (MXNC).

25.14.28 – PD-KSI (KSI Apartments)

a. *Planned Development Approved* - The PD-KSI Zone is regulated in accordance with the preliminary development plan approved by the Planning Commission on July 14, 2004, as may be amended.

b. *Designated Equivalent Zone* - Designated equivalent zone: Mixed-Use Transit District Zone (MXTD).

25.14.29 – PD-RCI (Rockville Center, Inc.)

a. *Planned Development Approved* - The PD-RCI Zone is regulated in accordance with the amended preliminary development plan ~~PDP1994-0001E~~ approved by the Mayor and Council by Resolution No. 10-05 on May 2, 2005, as may be amended.

b *Designated Equivalent Zone* - Designated equivalent zone: Mixed-Use Transit District Zone (MXTD).

25.14.30 – PD-TC (Twinbrook Commons)

a. *Planned Development Approved* - The PD-TC Zone is regulated in accordance with the preliminary development plan ~~(PDP2004-00009)~~ approved by the Mayor and Council by Resolution No. 9-05 on April 4, 2005, as may be amended.

b. *Designated Equivalent Zone* - Designated equivalent zone: Mixed-Use Transit District Zone (MXTD).

25.14.31 – PD-TS (Town Square)

a. *Planned Development* ~~*Approved*~~ *Approved -* The PD-TS ~~(Town Square)~~ Zone is regulated in accordance with the preliminary development plan ~~PDP2003-00007~~ approved by the Planning Commission on August 6, 2003, as may be amended.

b. *Designated Equivalent Zone* - Designated equivalent zone: Mixed-Use Transit District Zone (MXTD).

25.14.32 – PD-SG (Shady Grove)

a. *Planned Development Approved* - The PD-SG is regulated in accordance with the ~~detailed~~ exploratory application ~~approved by the Planning Commission on January 24, 2001 pursuant to Comprehensive Planned Development CPD97-0003~~ approved by the Mayor and Council by Resolution No. 4-98 on February 9, 1998.

b. *Designated Equivalent Zone* - Designated equivalent zone: Mixed-Use Employment Zone (MXE).

25.14.33 – PD-MC (Metro Center)

a. *Planned Development* ~~*Approved*~~ *Approved -* The PD-MC ~~(Metro Center)~~ Zone is regulated in accordance with the preliminary development plan ~~PDP2004-00008~~ approved by the Mayor and Council by Resolution No. 5-05 on March 7, 2005, as may be amended.

b. *Designated Equivalent Zone* - Designated equivalent zone: Mixed-Use Transit District Zone (MXTD).

25.14.34 – PD-CB (Champion Billiards)

a. *Planned Development* ~~*Approved*~~ *Approved -* The PD-CB Zone is regulated in accordance with the preliminary development plan ~~(PDP200-00011)~~ approved by the Mayor and Council by Resolution No. 14-06 on October 23, 2006, as may be amended.

c. *Designated Equivalent Zone* - Designated equivalent zone: Mixed-Use Corridor District Zone (MXCD).

Article 15 – Special Exceptions

25.15.01 – Special Exceptions

a. *Generally*

1. *Application Procedure* – Applications for Special Exceptions must be filed in accordance with Section 25.07.01.c and ~~are~~ reviewed in accordance with the provisions of Section 25.07.07.

2. *Findings* - The Board of Appeals must not grant any petition for a special exception unless it finds from a preponderance of the evidence of record that:

   (a) The proposed use does not violate or adversely affect the Plan, this Chapter or any other applicable law; and

   (b) The proposed use at the location selected will not:

      (i) Adversely affect the health and safety of residents or workers in the area;

      (ii) Overburden existing and programmed public facilities as provided in Article 20 of this Chapter and as provided in the adopted Adequate Public Facilities Standards Manual;

      (iii) Be detrimental to the use or development of adjacent properties or the neighborhood;

      (iv) Change the character of the neighborhood in which the use is proposed considering services currently provided, population density, character, and number of similar uses; and

      (v) Constitute a nuisance because of noise, traffic, number of people, or type of physical activity; and

   (c) The proposed use complies with all applicable requirements of this Chapter, including, but not limited to, the special requirements contained in Section 25.15.02 and the general purposes of this Chapter contained in Section 25.01.02.

3. *Imposition of Terms, Conditions, and Restrictions* - The Board of Appeals may impose terms, conditions, and restrictions upon the grant of any special exception that are reasonably necessary to protect adjacent properties, the neighborhood, and the residents and workers in the vicinity. Compliance with

all such terms, conditions, and restrictions are deemed to be continuing conditions imposed upon the grant of the special exception.

b. *Modifications* – ~~The Board may amend or modify the terms or conditions of a special exception on request of the special exception holder~~The operator of a special exception or the subject property owner may file an application to modify the terms or conditions of the special exception.

1. *Minor Modification*

(a) *Chief of Planning Approval* - If the proposed modification is such that the terms or conditions can be modified without substantially changing the nature, character, or intensity of the use and without substantially changing the effect of traffic from the use or on the immediate neighborhood, the Chief of Planning may modify the term or condition without convening a public hearing to consider the proposed change.

(b) *Decision* - A copy of the Chief of Planning's decision modifying a special exception must be transmitted to the holder of the special exception, the Planning Commission, the Board of Appeals, and all parties entitled to notice in accordance with Article 5.

(c) *Opportunity for a Hearing on the Decision* - The ~~resolution~~ decision letter must state that any ~~party~~ interested person may, within 15 days after the date of the written notification of the Chief of Planning's decision, request a public hearing on the Chief of Planning's action. The request must be in writing, and must specify the reasons for the request and the nature of the objections or relief desired. If a request for a hearing is received, the decision of the Chief of Planning ~~must~~ shall become void and the application will be referred to the Board of Appeals to conduct a public hearing and render a decision..

2. *Major Modification*

(a) *Board of Appeals' Approval* – If, in the opinion of the Chief of Planning, the proposed modification substantially alters the nature, character, or intensity of use or the conditions of the original grant, the Board must convene a public hearing to consider the proposed modification. Except as otherwise provided in this Section, such request for modification is subject to the requirements set forth in Article 5, and the Board must receive and process ~~petitions~~ applications for modification of a special exception in accordance with the provisions of that Article.

(b) *Public Hearing* - The public hearing must be limited to consideration of the following:

(i) Proposed modifications ~~noted in the Board's notice of public hearing~~as set forth in the application; and

(ii) Those aspects of the special exception use that are directly related to, or affected by the proposed modification.

(c) *Additional Considerations for Certain Expansions* - Notwithstanding the provisions of subsection 25.15.01.b.2.(b) above, the Board shall consider other aspects of the special exception if the modification proposes an expansion of the total floor area of all structures or buildings by more than 25%, or 7,500 square feet, whichever is less.

(d) *Decision* - After the close of the record of the proceedings, the Board must issue a decision in accordance with the requirements of Article 5.

(e) *Conditions* -As a condition of any modification, the Board may require the underlying special exception to be brought into compliance with the general landscape, streetscape, pedestrian circulation, noise, and screening requirements of Article 17, if:

(i) The proposed modification expands the total floor area of all structures or buildings by more than 25%, or 7,500 square feet, whichever is less; or

(ii) The expansion, when considered in combination with the underlying special exception, changes the nature or character of the special exception to an extent that substantial adverse effects on the surrounding neighborhood could reasonably be expected if the requirements of Article 17 are not met.

3. Notices.

(a) Notices of filing of an application for modification of a special exception must be given in accordance with the provisions of §25.05.03.C.

(b) Notices of Board of Appeals hearing on an application for modification of a special exception must be given in accordance with of §25.07.08.6

4~~3~~. *Substantial Changes Requiring a New Application* – An application for a new special exception is required when substantial modifications meeting the criteria of Section 25.05.07.d are met.

25.15.02 – Additional Requirements for Certain Special Exceptions

a. *Accessory Apartments*

1. *General Requirements* – Accessory apartments must:

(a) Be contained in the same building as a single unit detached dwelling; and

(b) Contain facilities for:

(i) Cooking;

(ii) Eating;

(iii) Sanitation; and

(iv) Sleeping.

2. *Specific Requirements*

(a) *Limitation to One (1)* – Only one (1) accessory apartment may be created in, or attached to an existing single unit detached dwelling.

(b) *Lot Requirements* - Accessory apartments may only be created on a lot:

(i) Which is occupied by a family of related persons;

(ii) Which contains no other rental residential use;

(iii) Which does not contain rooms for rent or a boarding house; and

(iv) Which does not contain a major home-based business enterprise.

3. *Ownership Requirements* – The owner of a lot on which an accessory apartment is located must occupy one (1) of the dwelling units, except for bona fide temporary absences not exceeding six (6) months in any 12-month period. The period of temporary absence may be increased by the Board at any time upon a finding that a hardship would otherwise result. Any request for an extension of the period of temporary absence made subsequent to the initial grant of the special exception must be made in compliance with the procedures for a minor modification of a condition of a special exception in 25.07.01.b.(1).

4. *Development Requirements*

(a) Both the main dwelling and the accessory apartment must comply with all current development standards, including off-street parking requirements.

(b) No variance may be granted to accommodate an accessory apartment.

5. *Design Requirements*

~~(b)~~(a) *Separate Entrance* - Any separate entrance to the accessory apartment must be located so that the appearance of a single unit detached dwelling is preserved.

~~(c)~~(b) *External Modifications and Improvements* - All external modifications and improvements to the single-unit detached dwelling in which the accessory apartment is to be created, or to which it is to be added, must be compatible with the existing dwelling and surrounding properties.

~~(d)~~*Street Address* – The accessory apartment must have the same street address (house number) as the main dwelling.

(c)

~~(e)~~

~~(e)~~(d) *Occupancy Limitation* – The accessory apartment must house no more than three (3) persons and must be subordinate to the main dwelling.

6. A*dditional Findings for Special Exception Approval* – The Board must make the following additional findings:

(a) That such use will not constitute a nuisance because of traffic or number of people, and will cause no objectionable noise, odors, or physical activity; and

(b) That such use will not adversely impact the parking or traffic situation in the neighborhood.

7. *Additional Restrictions for Special Exceptions* – The following restrictions on special exceptions for accessory apartments apply:

(a) The owner must comply with the certification requirements of Chapter 5, Article XII of the Code;

(b) The special exception is granted solely to the owner/applicant and does not run with the land;

(c) The special exception automatically expires when either of the following occurs:

(i) The owner/applicant sells the property on which the accessory apartment is located; or

(ii) The owner/applicant no longer occupies any portion of the single-unit dwelling in which the accessory apartment is located; and

(d) The accessory apartment must be removed, dismantled, or otherwise rendered inoperative within 30 days of the expiration of the special exception.

8. *Additional Conditions* – The Board may impose additional conditions deemed necessary to protect and limit any adverse impact on adjacent properties and the neighborhood, including, but not limited to one (1) or more of the following:

(a) Restricting the number of people that may occupy the accessory apartment;

(b) Prohibiting rental of the accessory apartment;

(c) Limiting the total number of motor vehicles that may be parked on the lot; and/or

(d) Limiting the total number of vehicles that may be used and parked on-street by the occupants of both the accessory apartment and the main dwelling.

b. *Adult Oriented Establishments*

1. *Scope* – This subsection applies to adult oriented establishments that are permitted as special exceptions in the ~~Heavy~~ Light Industrial ("I-~~H~~L") Zone.

2. *Additional Findings Required for Adult Oriented Establishments* – The Board must make the following additional findings:

(a) That the owners and operators of any adult oriented establishment have devised and will implement a procedure sufficient to ensure that no person under the age of 18 will be allowed access to the establishment; and

(b) That neither the owner nor the operator of such a use has ever been convicted of violating any law, ordinance, or regulation dealing with

obscenity or restricting the access of minors to such material, activities, or establishments.

3. *Additional Development Standards* – Adult oriented establishments are subject to the following additional development standards:

   (a) No adult oriented establishment is allowed within a structure that is located within 1,000 feet of the nearest property line of any residence, school, church, library, public facility, or public building;

   (b) Any employee of an adult oriented establishment must be at least 18 years of age and must never have been convicted of violating any law, ordinance, or regulation concerning obscenity or restricting the access of minors to material, activities, or establishments;

   (c) No person under the age 18 is permitted access to any adult oriented establishment; and

   (d) No sexually oriented material or sexually oriented activities are allowed to be visible or audible from outside the establishment~~;~~.

c. *Automobile Filling Station, Class I; Automobile Filling Station, Class II; Restaurant with Drive-Through and Mechanical Carwash*

   1. *Scope* – The provisions of this subsection apply to automobile filling stations, class I; automobile filling stations, class II; restaurants with a drive-through; and mechanical carwashes**.**

   2. *Additional findings required for automobile filling stations, class I; automobile filling stations, class II; restaurants with a drive-through; and mechanical carwashes* - The Board must make the following additional findings:

      (a) That the use at the location proposed will not result in a multiplicity and saturation of similar uses in the same general neighborhood of the proposed use; and

      (b) That all the additional development and use requirements contained in subsection 25.15.02.c.3.(a)(i)-(v) of this Section will be satisfied.

   3. *Additional Development Standards*

      (a) All uses enumerated in this subsection, 25.15.02.c must be located in such a manner that the proposed use:

(i) Will not preempt frontage on a major highway in a manner that substantially reduces the visibility and accessibility of an interior commercial area zoned or proposed for commercial use which is oriented to the same highway;

(ii) Will not impair the movement of through traffic along an adjoining thoroughfare through congestion and reduction of street capacities or cause the standing or backup of vehicles in the public right-of-way while awaiting service on the property in question;

(iii) Will not cause frequent turning movements across sidewalks and pedestrian ways, thereby disrupting pedestrian circulation within a concentration of retail activity;

(iv) Will not result in a fragmentation of the development pattern, thereby creating unnecessary additional points of vehicular conflict with an adjoining highway and adversely affecting the orderly development of the surrounding neighborhood; and

(v) Will not preempt the use of any parking spaces or on-site driveways or cause vehicles waiting for service to back up into adjacent service drives or public roads by vehicles.

(b) All restaurants with drive-through service are required to occupy a record lot that:

(i) Is at least 400 feet away from any school site or parcel of land zoned or planned for single residential unit development or medium residential density use. (This setback does not apply to residential or educational properties recommended for a nonresidential or noneducational use in the Plan.);

(ii) Has a minimum of 200 feet of lot frontage on a business district road or major highway at the front lot line, and must preempt the utilization of such 200 feet of frontage by any other use; and

(iii) Has a minimum lot size of 40,000 square feet, and must preempt the utilization of such lot area by any other use.

4. *Additional Parking, Loading, and Access Requirements*

(a) When a use enumerated in this subsection, 25.15.02.c.1., above occupies a corner lot, the ingress and egress driveways must be located at least 75 feet from the point of intersection of the street line and the corner arc.

(b) Open storage of motor vehicles or trailers, except those temporarily awaiting service during the business hours of the establishment, is prohibited.

(c) Vehicular access to any residential street is prohibited.

5. *Additional Screening and Landscaping Requirements* – Lighting facilities must be arranged or screened so that they neither disturb the occupants of nearby residential properties nor interfere with the movement of traffic.

6. *Special Development and Use Requirements for Automobile Filling Station, Class I and Class II*

(a) When located in the ~~C~~ MXC Zone, automobile filling stations, class I must:

(i) Be an integral part of a neighborhood shopping center;

(ii) Be contained in a structure limited in size to two (2) single car service bays plus rest rooms and office or supply storage space;

(iii) Be limited in function to dispensing gasoline, oil, grease, antifreeze, tires, batteries, and automobile accessories directly to motor vehicles and to washing, polishing, and servicing motor vehicles only to the extent of installation of the enumerated items;

(iv) Not rent or sell motor vehicles, trailers, or general replacement parts;

(v) Not overhaul, tune up, or repair motors or bodies, or provide break relining or wheel alignment service, upholstery work, auto glass work, painting, welding, tire recapping, or auto dismantling; and

(vi) Extinguish all floodlights at the close of business or 11:00 p.m., whichever is earlier.

(b) Gasoline pumps or other service appliances must be located on the lot at least 20 feet behind the building line, and all service, storage, or similar activities in connection with such use must be conducted entirely within the building.

(c) The following additional parking, loading, and access requirements apply:

(i) Parking of vehicles being serviced or stored for customers on streets, alleys, public sidewalks, or public park strips is prohibited; and

(ii) When such use occupies a corner lot, the ingress and egress driveways must be located at least 75 feet from the point of intersection of the street line and the corner arc, and these driveways must not exceed 25 feet in width.

(d) When located in a Mixed-Use Zone, the design of the building and site layout should reflect the development standards set forth in Article 13, consistent with the particular needs for an automobile filling station.

d. *Bed-and-Breakfast Lodging*

1. *Scope* – This subsection applies to bed-and breakfast lodgings in residential zones.

2. *Additional Findings Required* – The Board must make the following additional findings:

(a) The owner of the dwelling unit in which the bed-and-breakfast lodging is located must live in the dwelling, and the bed-and-breakfast use must be subordinate to the residential use;

(b) The minimum lot area must be at least 9,000 square feet, but no less than the minimum lot area required in the zone; and

(c) The proposed use must have adequate and safe access from a public street.

3. *Development Standards*

(a) No more than three (3) guest rooms are allowed on a lot or parcel of less than two (2) acres.

~~(b)~~Parking must be located only in the side or rear yard. The Board of Appeals may allow on-street parking in conjunction with the use if the Board finds that such parking will not have an adverse impact on the surrounding neighborhood.

~~(c)The owner must register the use with the Department of Community Planning and Development Services.~~

~~(d)~~(b) ~~The owner of the dwelling must maintain a record of all transient visitors who stay in the bed-and-breakfast lodging. If requested, the owner must provide a copy of this record to the City's Department of Community Planning and Development Services.~~

e. *Charitable and Philanthropic Institutions*

1. *Scope* – This Section applies to charitable and philanthropic institutions.

2. *Special Development and Use Standards* – If the use is to be located in a residential zone, it must have:

   (a) A lot area of at least 25,000 square feet;

   (b) A lot frontage of at least 150 feet; and

   (c) Building setbacks of at least 35 feet in the front yard, side yards equal to at least two (2) times the height of the tallest institutional building located on the lot which is proximate to the side yard and a rear yard of at least 40 feet.

f. *Child Care Centers*

1. *Scope* – This subsection applies to child care centers in all zones where a special exception is required.

2. *Additional Findings and Conditions*

   (a) The Board must make the following additional findings:

      (i) The site provides ample outdoor play space, free from hazard and appropriately equipped for the age and number of children being cared for;

      (ii) The use satisfies all applicable state and county requirements; and

      (iii) If a child care center is located within 1,000 feet of another center, the cumulative effect of the centers will not have an adverse impact on the neighborhood due to noise, traffic, or other similar facts.

   (b) Adequate fencing and screen planting may be required, if deemed necessary, to protect adjacent properties against intrusion.

3. *Special Development and Use Requirements – Additional Development Standards*

   (a) Child care centers must meet the following lot size standards, based on the number of children being cared for at any one (1) time:

Number of Children	Minimum Lot Area
9 to 12	7,000 sq. ft.
13 to 25	10,000 sq. ft.
26 to 40	20,000 sq. ft.
More than 40	30,000 sq. ft. plus 500 square feet for each child over 40 children.

(b) If any child care center cares for more than 100 children at any one (1) time, and if the special exception approval limits the use of the property so that no more than 30% of the children are involved in outside activities at any one (1) time, then the child care center must have a minimum lot area of 30,000 square feet plus 400 square feet for each child in excess of 40.

g. *Educational Institutions, Private*

1. *Scope* – This subsection applies to private educational institutions, including but not limited to general academics, business, art, music, dance, trade, and job training in all zones where a special exception is required. This section does not apply to any private educational institution located on a lot or parcel that contains a church, synagogue, or other place of worship that is affiliated with the private educational institution.

2. *Special Development and Use Requirements* – The following special development and use requirements apply:

(a) Institutions which offer any general academic instruction at levels above the eighth grade must have:

(i) A lot area of at least one (1) acre plus 875 square feet for each student in excess of 50;

(ii) A lot frontage of at least 300 feet; and

(iii) Building setbacks of at least 50 feet in the front yard, side yards equal to at least two (2) times the height of the tallest institutional building located on the lot which is proximate to the side yard and a rear yard of at least 50 feet.

(b) Kindergartens and nursery schools must have:

(i) A lot area of at least 10,000 square feet for up to 30 students~~, plus 30,000 square feet for each student over 30~~;

(ii) A lot frontage of at least 100 feet; and

(iii) Building setbacks of at least 35 feet in the front yard, side yards equal to at least the height of the tallest institutional building located on the lot which is proximate to the side yard and a rear yard of at least 40 feet.

(c) All other private educational institutions must comply with the following:

(i) Where the maximum attendance at any one (1) time does not exceed 40 students, such institution must have:

A. A lot area of at least 10,000 square feet for up to 20 students, plus 500 square feet for each student over 20 students;

B. A lot frontage of at least 150 feet; and

C. Building setbacks of at least 35 feet in the front yard, side yards equal to at least the height of the tallest institutional building located on the lot which is proximate to the side yard, and a rear yard of at least 40 feet.

(ii) Where the maximum attendance at any one (1) time exceeds 40 students, such institution must have:

A. A lot area of at least one (1) acre plus 700 square feet for each student in excess of 60;

B. A lot frontage of at least 200 feet; and

C. Building setbacks of at least 50 feet in the front yard, side yards equal to at least two (2) times the height of the tallest institutional building located on the lot which is proximate to the side yard, and a rear yard of at least 50 feet.

3. *Additional Screening and Landscaping Requirement* – School buses must be garaged or be stored in an area to the rear of the enclosed main building enclosed by such adequate screening as may reasonably be required by the Board of Appeals.

h. *Home- Based Business Enterprise (Major)*

1. *General Provisions* – Major Home-Based Business Enterprises are subject to the applicable provisions of 25.09.07 which include, but are not limited to general provisions, inspections, and home-based business enterprise registry.

2. *Major Home-Based Business Enterprises* – Major home-based business enterprises are subject to the following provisions:

   (a) *Special Exception Approval* – All major home-based business enterprises are special exceptions subject to the applicable review provisions of Article 15 of this Chapter.

   (b) *Application Procedures* – As part of the special exception application, the applicant must provide all of information required to be provided for a minor home-based business enterprise as set forth in subsection 25.09.07.c.2 and 3, plus such additional information required for special exceptions.

   (c) *Employees* – A major home-based business enterprise must be conducted by an individual residing in the dwelling unit, and may employ no more than two (2) nonresident assistants or business associates who are ~~required to be~~ at the dwelling unit for any length of time during the 24-hour day. The arrival and departure of the nonresident assistant or associate are not included in the limitations or visits to the site.

   (d) *Visits to the Site*

      (i) The maximum number of visits to and from the site, including deliveries, is limited to 20 visits per week unless a greater number is set by the Board of Appeals.

      (ii) Visits are prohibited between the hours of 10 pm and 7am, except in cases of medical emergency.

   (e) *Sale and Production of Goods and Services* – The following activities are permitted in a major home-based business enterprise:

      (i) The sale of goods, excluding hazardous items;

      (ii) The production of handmade products; and/or

      (iii)Personal and professional services.

   (f) *Display / Storage of Goods* – Display or storage of goods will be as set forth by the Board of Appeals.

   (g) *Equipment or Facilities* – No equipment or facilities may be used other than what is reasonably related to the production of handmade products or personal or professional services provided by the home-based business enterprise.

3. *Additional Restriction* – The special exception is granted solely to the owner / applicant and does not run with the land. The special exception expires when either of the following occurs:

   (a) The owner / applicant sells the property; or

   (b) The owner / applicant no longer ~~occupies~~ utilizes a ~~any~~ portion of the dwelling ~~in which~~ for the home-based business enterprise ~~is located~~.

i. *Hospitals or Nursing Homes*

The following special development and use requirements apply:

1. *Additional Development Standards for Hospitals* – Hospitals must have:

   (a) A net lot area of at least five (5) acres;

   (b) A lot frontage of at least 200 feet; and

   (c) Building setbacks of at least 50 feet in the front yard, side yards equal to at least three (3) times the height of the tallest building located on the lot which is proximate to the side yard, but not less than 75 feet, and a rear yard of at least 100 feet.

2. *Additional Development Standards for Nursing Homes* - Nursing homes must have 1,000 square feet of net lot area per bed.

j. *Housing for Senior Adults and Persons with Disabilities*

1. *Scope* – This subsection applies to housing for senior adults and persons with disabilities.

2. *Additional Required Findings* – The Board must make the additional finding that the site proposed for such use has adequate accessibility to, or provides on-site, public transportation, medical services, shopping areas, recreational, and other community services frequently used by residents of such use.

3. *Special Development and Use Requirements*

   (a) *Minimum Lot Size* - Development must be on a record lot of at least two (2) acres.

   (b) *Minimum Street Frontage* - The lot must have at least 100 feet of frontage on a public street.

(c) *Setbacks* - All structures on the site must be set back at least as follows:

(i) Front yard: 50 feet, except for projects in the MXT Zone, the setback may be the minimum required in the zone; and

(ii) Side and rear yards: Twice the minimum required in the zone.

(d) *Maximum Lot Coverage* - Notwithstanding the provisions of Section 25.10.05.a and 25.10.05.b, in the R-400 and R-200 Zones, the maximum lot coverage is limited to 30%; provided that the development of the facility does not exceed one (1) story and also does not exceed 20 feet in height, except as provided in subsection (e) below.

(e) *Building Height* - Building height is normally limited to the height allowed in the zone. The Board may allow additional height up to 50 feet in a single unit detached residential zone if additional setbacks are provided and the Board finds that the additional height will not have an adverse impact on the adjoining and confronting properties. Additional height up to 50 feet may be allowed by the Board in a mixed-use zone without the requirement for additional setbacks.

4. *Occupancy*

(a) Occupancy of a dwelling unit is restricted to the following:

(i) A senior adult or person with disabilities, as defined in Section 25.03.02;

(ii) The spouse of a senior or disabled resident, regardless of age or disability;

(iii) The resident caregiver, if needed to assist a senior or disabled resident;

(iv) In a development designed primarily for persons with disabilities rather than senior adults, the parent, daughter, son, sister, or brother of a disabled resident, regardless of age or disability; and

(v) Resident staff necessary for operation of the facility.

(b) Age restrictions must comply with at least one (1) type of exemption for housing for older persons from the familial status requirements of the federal "Fair Housing Act," Title VIII of the Civil Rights Act of 1968, and subsequent amendments.

k. *Life Care Facility*

1. *Scope* - This subsection applies to life care facilities

2. *Additional Required Findings* - The Board must make the additional finding that the site proposed for such use has adequate accessibility to, or provides on-site, public transportation, medical services, shopping areas, recreational and other community services frequently used by residents of such use.

3. *Special Development and Use Requirements*

(a) *Minimum Lot Area* - Development must be on a record lot of at least five (5) acres;

(b) *Frontage* - The lot must have at least 100 feet of frontage on a public street;

(c) *Setbacks* - All structures on the site must be set back at least as follows:

(i) Front yard: 50 feet

(ii) Side and rear yards: Twice the minimum required in the zone or the height of the building, whichever is greater; except that if the adjoining property is in a single unit detached residential zone and is developed with a nonresidential use, the setback is the minimum required in the zone.

(d) *Lot Coverage in R-400 and R-200 Zones* - Notwithstanding the provisions of Section 25.10.05.a and 25.10.05.b, in the R-400 and R-200 Zones, the maximum lot coverage is limited to 30%.

(e) *Building Height* - Building height is normally limited to the height allowed in the zone. The Board may allow additional height up to 50 feet if additional setbacks are provided and the Board finds that the additional height will not have an adverse impact on the adjoining and confronting properties.

4. *Occupancy*

(a) Occupancy of a dwelling unit is restricted to the following:

(i) A senior adult or person with disabilities, as defined in Sec. 25.03.02;

(ii) The spouse of a senior or disabled resident, regardless of age or disability; and

(iii) The resident caregiver, if needed to assist a senior or disabled resident.

(b) Age restrictions must comply with at least one type of exemption for housing for older persons from the familial status requirements of the federal Fair Housing Act, Title VIII of the Civil Rights Act of 1968, and subsequent amendments.

l. *Personal Living Quarters* – In addition to the required findings in Section 25.15.01, the Board must also find that adequate on-site parking is available so the personal living quarters will not overburden the existing neighborhood.

m. *Pawnbroker* – No pawnbroker is permitted within a structure that is located:

1. Within 500 feet of the nearest property line of any residentially zoned property; or

2. Within 1,500 feet of another structure in which a pawnbroker is located.

n. *Public Utility Buildings and Structures*

In all residential zones where authorized, all public utility buildings and structures, whenever practicable, must have the exterior appearance of a residential building together with such landscaping, screen planting, and fencing as may reasonably be required by the Board.

o. *Restaurants in I-L Zone*

The establishment of a restaurant in the I-L Zone:

1. Must be accessory to the main use of any lot;

2. Must be located within the main building; and

3. Must not occupy more than 25% of the gross floor area of the building.

p. *Swimming Pools, Non-accessory*

1. *Special Development and Use Requirements* – The following special development and use requirements apply to non-accessory swimming pools:

(a) The membership of any such pool operated on a membership basis must not exceed four (4) times the legal capacity of the pool, and a family membership must be computed at three and one-half (3.5) persons;

(b) Membership of any such pool must not exceed 2,800 persons; and

(c) The number of persons allowed on the lot on which the pool is located must not exceed the legal capacity of the pool.

2. *Additional Development Standards*

(a) *Minimum Lot Area* - The minimum lot size of any non-accessory swimming pool must be in accordance with the following table. Legal capacity must be calculated in accordance with the requirements of 25.03.03.c.10:

Legal Capacity of Pool (persons)	**Minimum Lot Area (acres)**
0 – 350	3
351 – 438	3.5
439 – 525	4
526 – 613	4.5
614 – 700	5

(b) *Minimum Deck Size* – The minimum deck size of a non-accessory swimming pool must be calculated in accordance with the requirements of 25.03.03.c.11.

3. *Distance from Property Line and Single-Unit Dwellings* - Any such pool must be located no less than 75 feet from the nearest property line nor less than 125 feet from any existing single-unit detached or semi-detached dwelling, except that where the lot upon which such pool is located abuts a railroad right-of-way, publicly owned land (except streets) or land in a nonresidential zone, the pool may be constructed not less than 25 feet from such railroad right-of-way, publicly owned land, or land in a nonresidential zone.

q. *Taxicab Service*

1. *Special Development and Use Requirements* – The following special development and use requirements apply to taxicab services:

(a) All vehicles used in connection with such use must be parked entirely within the lot on which the use is operated; and

(b) Servicing of such vehicles, including but not limited to dispensing of gasoline and oil, is prohibited on the same lot unless auto repair is permitted in the zone in which the lot is located.

r. *Veterinary Office and Animal Hospital*

~~2.~~ *Special Development and Use Requirements* – The special development and use requirements for veterinary office and animal hospitals are as follows:

(a) Such use must have a lot area of at least one (1) acre; and
(b) No structure for the housing of animals is permitted within 50 feet from any residential use.

s. *Wireless Communication Facility*

1. *Scope* – This subsection applies to wireless communication facilities mounted on free-standing antenna structures.

2. *Special Development and Use Requirements* – Wireless communication facilities must comply with the development standards contained in Section 25.09.08.

3. *Additional Findings Required* – The Board of Appeals must make those additional findings required in Section 25.09.08.

Article 16 – Parking and Loading

25.16.01 – Purpose

The purposes of parking standards are to:

1. Provide adequate parking to support the uses served;

2. Minimize the detrimental impact of off-street parking on adjoining properties;

3. Minimize parking to encourage the use of public transit or other alternatives to the automobile;

4. Ensure the proper and uniform development of parking areas throughout the City;

5. Ensure proper loading configurations and access; and

6. Minimize stormwater runoff from parking lots and structures.

25.16.02 – General Requirements

a. *General Provisions*

1. No land can be used or occupied, no structure can be designed, erected, attached, used, or occupied, and no use can be operated unless the required parking and loading facilities are provided:

   (a) In the minimum or maximum amounts set forth in this Article;

   (b) In accordance with the design standards set forth in this Article; and

   (c) In accordance with this Article and may not be rearranged or altered without approval of the Approving Authority.

2. Automobile off-street parking and loading areas cannot be reduced in area or encroached upon by buildings, vehicle storage, loading or unloading, or any other use where such reduction or encroachment will reduce the area below that required by this Article.

3. Any additional off-street parking and loading facilities required as a result of an expansion of or a change in any use must be likewise established and maintained or such use is required to cease until such facilities are provided.

b. *Special Provisions for Certain Zones*

1. *R-400, R-200, R-150, R-90, R-75, R-60, and R-40 Zones* - In the R-400, R-200, R-150, R-90, R-75, R-60, and R-40 Zones, off-street parking of motor vehicles is limited to:

   (a) Passenger vehicles;

   (b) Not more than one (1) delivery-type commercial vehicle per dwelling unit not exceeding three-quarter (3/4) ton capacity or one (1) that has been issued a special permit pursuant to Section 23-27 of the City Code; and

   (c) One (1) trailer which cannot be used for dwelling purposes or any accessory use, provided such trailer is parked behind the front building line whenever possible.

2. *RMD Zones* - In the RMD Zones:

   (a) Off-street parking of motor vehicles is limited to:

      (i) Passenger vehicles; and

      (ii) Not more than one (1) delivery-type commercial vehicle not exceeding three-quarter (3/4) ton capacity per dwelling unit or one (1) truck that has been issued a special permit pursuant to Section 23-27 of the City Code.

   (b) Off-street parking of trailers in such zones is prohibited.

3. *MXTD Zones* - In the MXTD Zone, limited off-street parking of motor vehicles between the front building line and the front lot line ~~is prohibited, except that~~may be allowed by the Approving Authority in accordance with the provisions of Sec. 25.13.07.a.6. The Approving Authority also has the authority to waive the requirements of this Section, Section 25.16.04.b, and Section 25.16.07.a and b provided that:

   (a) A previously existing single unit detached dwelling is being converted to a permitted use in the MXTD Zone;

   (b) Due to the location of the existing structure or structures on the lot, compliance with the parking, loading, and access requirements of this Sections 25.16.02, cannot be reasonably accomplished; or

   (c) Such a waiver would enable the proposed use to better satisfy the

parking space requirements of Section 25.16.03.

4. *MXE Zone* - In the MXE Zone, the required parking may be reduced by up to 15% by the Planning Commission if:

   (a) The main building entrance is located within 2,500 feet of a Metro rail transit station entrance; and

   (b) The site has environmental requirements on at least ten percent (10%) of the net lot area that limits the developable area of the site. For purposes of this subsection, environmental requirements include significant tree preservation areas, stream buffer areas, or other natural features of the site identified in the City development approval as a significant environmental feature to be retained.

25.16.03 – Number of Spaces Required

a. *Employee Calculation* - For the purposes of this article, the number of employees for a use shall be computed on the basis of the maximum number of persons to be employed at any one (1) time other than at changes of shifts.

b. *Handicapped Spaces* – The number of spaces required includes spaces for the handicapped and aged as set forth in the Maryland Code for the Handicapped.

c~~b~~. *Prohibited Uses of Parking Areas and Loading Spaces* - No parking area or loading space can be used for the storage, sale, repair, dismantling, or servicing of any vehicles, equipment, materials, or supplies.

d~~c~~. *Table of Space Requirements* - The number of parking spaces for both vehicles and bicycles required for each class of land use are as shown in the following table:

Use Category	Use	Auto Parking Spaces		Bicycle Parking Spaces			Additional Requirements
		Unit Measure	Base Number Required	Unit Measure	Short Term Space	Long Term Space	
Residential	Single unit detached	Per dwelling unit	2	Dwelling unit	0	0	
	Single unit semi-detached	Per dwelling unit	2	Dwelling unit	0	0	
Residential (con't)	Dwelling, townhouse	For 1 or 2 bedrooms	1.5	Dwelling unit	0	0	

Use Category	Use	Auto Parking Spaces		Bicycle Parking Spaces			Additional Requirements
		Unit Measure	Base Number Required	Unit Measure	Short Term Space	Long Term Space	
		For 3 or more bedrooms	2				
	Dwelling, multiple-unit	For 0 (zero) bedrooms	1	Dwelling unit	1 per 50	1 per 3	
		For 1 bedroom	1				
		For 2 or more bedrooms	1.5				
	Live-work unit	For 1 or 2 bedrooms	2	Unit	1 per 5	1 per 3	
		For 3 or more bedrooms	2				
Institutional	Ambulance service	Service vehicle	One (1) space per 3 service vehicles and 1 space for each 300 SF of office area	Square feet of gross ~~bldg.~~floor area	1 per 30,000 SF ~~of gross floor area~~	2 per 15,000 SF ~~of gross floor area~~	
	Place of worship	300 SF	1	Square feet of ~~net bldg.~~gross floor area	2 per 2,000 SF	1 per 4,000 SF	See Sec. 25.16.03d below
	Community center, courthouse, library, museum, civic club, private club, and lodge	Per 200 SF of gross floor area	1	Square feet of gross floor~~net bldg.~~ area	2 per 10,000 SF	1 per 10,000 SF	
	Health and fitness establishment		1	Square feet of gross floor~~net bldg.~~ area	2 per 2,000 SF	2 per 4,000 SF	
	Educational institutions	Per 2 employees including teachers and administrators	1	Grades 2 - 5	2 per classroom	1 per classroom	Planning Commission to determine additional vehicle parking spaces required based on number
				Grades 6 - 12	3 per classroom	1 per classroom	
				College: SF of bldg. area	2 per 10,000 SF	2 per 20,000 SF	

Use Category	Use	Auto Parking Spaces		Bicycle Parking Spaces			Additional Requirements
		Unit Measure	Base Number Required	Unit Measure	Short Term Space	Long Term Space	
				Dormitory unit	1 per 20 dormitory units	1 per 3 dormitory units	
Institutional (con't)	Charitable or philanthropic institution	Per 2 employees, including teachers and administrators	1	Square feet of gross floor~~net bldg.~~ area	2 per 10,000 SF	2 per 40,000 SF	Planning Commission to determine additional vehicle parking spaces required based on operational factors
	Hospital or nursing home	Per each 1,000 SF of gross floor area	1 and	Square feet of gross floor~~net bldg.~~ area	2 per 40,000 SF	1 per 70,000 SF	Planning Commission may require additional bicycle parking
		Per each participating doctor	1 and				
		Per every 2 employees	1				
	Housing for senior adults and persons with disabilities	Per every 3 dwelling units – all spaces to be located within 150 feet of the building served	1	Dwelling unit	1 per 100 dwelling units	1 per 50 dwelling units	Planning Commission to determine additional vehicle parking spaces required based on operational factors
	Funeral home	Per each 50 SF of assembly area	1 and	Square feet of gross floor~~net bldg.~~ area	1 per 40,000 SF	2 per 40,000 SF	
		Per employee	1 and				
		Per each vehicle used in the business	1				
	Child care home or center in residential zone	Per 4 non-resident children, plus adequate pick-up and drop-off space	1	Square feet of gross floor~~net bldg.~~ area	1 per 10,000 SF	2 per 10,000 SF	In residential zones, on-street parking may be counted towards the required number of spaces

Use Category	Use	Auto Parking Spaces		Bicycle Parking Spaces			Additional Requirements
		Unit Measure	Base Number Required	Unit Measure	Short Term Space	Long Term Space	
	Child care home or center in non-residential zone	Per 6 children served at 1 time, plus adequate pick-up and drop-off space	1	Square feet of gross floor~~net bldg.~~ area	2 per 10,000 SF	2 per 10,000 SF	
	Adult day care center	Per 3.5 persons served at 1 time, plus adequate pick-up and drop-off area	1	Square feet of gross floor~~net bldg.~~ area	1 per 20,000 SF	2 per 10,000 SF	Minimum number of vehicle parking spaces required is 5; total required based on licensed capacity
Commercial	Automobile filling station	Per service bay	1 and	Square feet of gross floor ~~net bldg.~~ area	1 per 25,000 SF	2 per 12,000 SF	For facilities that include a car wash, reservoir spaces for vehicles equal to 5 times the simultaneous capacity of the mechanical car wash
		Per each employee	1 and				
		Per 200 SF of retail sales area	1				
	Bank drive-in windows & ATM's	Reservoir spaces per window or facility	4 and	N/A	0	0	Reservoir spaces for vehicles to be provided either in each drive-in lane, or in a common reservoir area. ATM's not part of a bank drive-in: no parking required.
	Bank drive-in windows & ATM's (con't)	Per employee	1				
	Medical or dental clinics or offices	Per 250 gross square feet	1	Square feet of gross floor~~net bldg.~~ area	2 per 40,000 SF	2 per 40,000 SF	Bicycle parking may also be determined by staff review

Use Category	Use	Auto Parking Spaces		Bicycle Parking Spaces			Additional Requirements
		Unit Measure	Base Number Required	Unit Measure	Short Term Space	Long Term Space	
	Bowling alley	Per alley	3	Per alley	1 per 2 alleys	1 per 10 alleys	Bicycle parking may also be determined by staff review See Sec. 25.16.03.e
	Furniture store	Per 500 gross SF accessible to the public	1 and	Square feet of patron use. area	1	1 per 70,000 SF	See Sec. 25.16.03.e Bicycle parking may also be determined by staff review.
		Per employee	1 and				
		Per each vehicle used in the business	1				
	Medical or dental office in a private residence	Per each professional using the office	2	Square feet of gross floor~~net bldg.~~ area	1	2 per 10,000 SF	Bicycle parking may also be determined by staff review.
Commercial (con't)	~~General o~~Offices (other than medical or dental)	Per 300 gross SF, including cellars or basements intended for occupancy	1	Square feet of gross floor~~net bldg.~~ area	2 per 40,000 SF	2 per 10,000 SF	See Sec. 25.16.03.e The Planning Commission or Board of Appeals may require additional vehicle parking spaces, depending on location and operational characteristics.
	Restaurant, full service	Per 50 SF of patron use area (excluding rest rooms)	1 and	Square feet of gross floor ~~net bldg.~~ area	2 per 5,000 SF	2 per 12,000 SF	See Sec. 25.16.03.e Planning Commission option to review
		Per 80 SF of outdoor patron use area	1 and				
		Per 2 employees	1				

Use Category	Use	Auto Parking Spaces		Bicycle Parking Spaces			Additional Requirements
		Unit Measure	Base Number Required	Unit Measure	Short Term Space	Long Term Space	
		Per 15 SF of bar patron area where bar patron area exceeds 10% of total patron use area	1				
	Restaurant, fast food	If located in a free-standing building	50 and	Square feet of gross floor~~net bldg.~~ area	2 per 5,000 SF	2 per 12,000 SF	See Sec. 25.16.03.e Reservoir spaces cannot impede other traffic in the parking lot. Facilities serving only via drive-through windows must provide the same reservoir spaces as a standard fast food restaurant.
		Reservoir spaces for each prick-up window	10 or				
		Reservoir spaces for windows with separate order and pick-up windows	5 and				
		Per 2 employees	1				
Commercial (con't)	Restaurant, accessory – within an office building	Per 300 SF	1 and	Square feet of gross floor ~~net bldg.~~ area	2 per 5,000 SF	2 per 12,000 SF	See Sec. 25.16.03.e
		Per 2 employees	1				
	Restaurant, accessory – within a hotel	Per 200 SF	1 and	Square feet of gross floor~~net bldg.~~ area	2 per 5,000 SF	2 per 12,000 SF	See Sec. 25.16.03.e
		Per 2 employees	1				
	Retail sales, trade or merchandizing (except furniture stores and supermarkets less than 30,000 SF of GFA)	Per 200 SF GFA	1	Square feet of gross floor~~net bldg.~~ area	2 per 5,000 SF	2 per 12,000 SF	See Sec. 25.16.03.e

Use Category	Use	Auto Parking Spaces		Bicycle Parking Spaces			Additional Requirements
		Unit Measure	Base Number Required	Unit Measure	Short Term Space	Long Term Space	
	Supermarkets, 30,000 SF of GFA or less	Per 200 SF	1 and	Square feet of gross floor~~net bldg.~~ area	2 per 5,000 SF	2 per 12,000 SF	See Sec. 25.16.03.e
		Per 2 employees	1				
	Automobile rentals	Per 300 SF of gross floor area leased by the operator	1 plus parking sufficient to accommodate all rental vehicles	Square feet of gross bldg. area	2 per 40,000 SF	2 per 10,000 SF	
	Shopping centers of 150,000 SF or more of GFA		The choice of 1 of the following:	Square feet of gross floor~~net bldg~~ area	2 per 5,000 SF	2 per 12,000 SF	See Sec. 25.16.03.e All required parking must be located within a 500-foot safe and convenient walking distance to the establishment served. Compliance with parking and loading requirements for either a. or b. are subject to the approving authority.
		Individual uses	a. The sum total of required parking spaces				
		Entire center	b. Per 1,000 SF of GFA				
		If restaurants total more than 15% of the GFA and	An additional 10 spaces per 1,000 SF of GFA or restaurant use				
		For theaters in excess of 750 seats	1 space per 4 seats for all seats beyond the first 750				
Commercial (con't)	Accessory drive-through window	Reservoir spaces including the space at the window where the transaction occurs	3	N/A	0	0	
	Health maintenance organization facility	Per 200 SF of gross floor area, including cellars and basements used for tenancy	1	Square feet of gross floor ~~net bldg.~~ area	1 per 40,000 SF	2 per 10,000 SF	Gross floor area does not include building area used for all-street parking

Use Category	Use	Auto Parking Spaces		Bicycle Parking Spaces			Additional Requirements
		Unit Measure	Base Number Required	Unit Measure	Short Term Space	Long Term Space	
	Hotel	Per guestroom or suite	1 and	Rentable rooms	2 per 40 rooms	2 per 20 rooms	
		Per 2 employees	1 and				
	Hotel (con't)	Per 400 SF of area used for ballrooms, meeting rooms, and other assembly spaces	1	Rentable rooms	2 per 40 rooms	2 per 20 rooms	
Miscellaneous	Recreational establishment, indoor, commercial other than a bowling alley or swimming pool	Per 2 participants based on the participants that can be accommodated	1 and	Participa nts	1 per 30 partici-pants	10 total spaces or 1 per 60 partici-pants	See Sec. 25.16.03.e Bicycle parking may also be determined by staff review
		Per 4 seats in spectator areas	1 and				
		Per every 2 employees	1				
	Recreational establishment, outdoor, commercial	Per every 2 employees	1	Auto spaces	1 per 10	1 per 20	See Sec. 25.16.03.e Additional spaces as determined at the time of Site Plan Review depending of the character of the use. Bicycle parking may also be determined by staff review.
	Swimming pools, non-accessory private, membership ~~(nonprofit), private~~	Per 7 persons of the legal capacity of the pool	1 and	Square feet of building, patio and deck gross	2 per 2,000 SF	1 per 4,000 SF	

Use Category	Use	Auto Parking Spaces		Bicycle Parking Spaces			Additional Requirements
		Unit Measure	Base Number Required	Unit Measure	Short Term Space	Long Term Space	
Miscellaneous (con't)	Swimming pools, non-accessory (commercial), and public (commercial & public)	Per every 2 employees	1				
	Swimming pooll s, accessory	At the pool site for each 3 dwelling units served beyond 1,500 feet walking distance to the pool	1	Square feet of building, patio and deck gross floor area and swimmin g pool area	2 per 5,000 SF	2 per 10,000 SF	
	Theater, auditorium, stadium or arena	Per each 4 seats or similar vantage	1 and	Seats	1 per 200 seats	1 per 40 seats	See Sec. 25.16.03.e
		Per every 2 employees	1				
	Transit stations	Per station	1,000	Per station	50	50	
Industrial and service	Manufacturing establishment	Per each 1,000 GFA	1 and	Square feet of gross floor net bldg. area	1	2 per 15,000 SF	Plus additional spaces as may be required by the Approving Authority depending on the character of the use
		Per each vehicle used with the business	1				
	Warehousing	Per each 1,000 GFA	1 and	Square feet of gross floor net bldg. area	1	2 per 40,000 SF	Plus additional spaces as may be required by the Approving Authority depending on the character of the use
		Per each vehicle used with the business	1				
	Wholesaling	Per each 1,000 GFA	1 and	Square feet of gross floor net bldg. area	1	2 per 40,000 SF	
		Per each vehicle used with the business	1				

Use Category	Use	Auto Parking Spaces		Bicycle Parking Spaces			Additional Requirements
		Unit Measure	Base Number Required	Unit Measure	Short Term Space	Long Term Space	
	Service industrial building	Per each 250 gross SF of floor area	1	Square feet of gross floor~~net bldg.~~ area	1	2 per 40,000 SF	
Industrial and service (con't)	Automobile repair garage	Per each 300 gross SF of floor area	1 and	Square feet of gross floor ~~net bldg.~~ area	2 per 40,000 SF	2 per 10,000 SF	
		Per employee	1				

e.~~d~~.*Religious Exception* - No parking spaces are required for a building used by a congregation on a lot of 12,000 square feet or less, whose religious beliefs prohibit the use of motor vehicles in traveling to and from religious services on the Sabbath and principal religious holidays and which the building may only be used for religious services on the Sabbath and principal religious holidays and as a residence for the clergy and his/her family. Such a building must, however, provide two (2) off-street parking spaces on its property. Other uses that may be located on the property that involve activities on days other than the Sabbath must provide off-street parking in accordance with this Article 16, or as may be required by the Board of Appeals in approving a special exception on the site.

f~~e~~. Maximum Parking Limits – In the MXTD and MXCD zones, the number of parking spaces to be provided is limited to no more than the standard shown in the tables above. Additional parking can only be provided if:

1. The additional parking consists of a permeable surface acceptable to the Department of Public Works; or

2. The additional parking is provided via an automated parking structure or in a structure above or below grade; or

3. Parking in connection with an automobile sharing program; or

~~3.~~4. All of the required public use space is provided on-site.

g~~f~~. *Determination of Requirements for Multiple Uses*

1. Except as provided in paragraph 3 and subsection h.5 below, when any land or building is used for two (2) or more purposes, the number of parking spaces

required must be the sum of the requirements for the various individual uses, computed separately in accordance with this article. Parking facilities for one (1) use cannot be considered as providing the required parking facilities for any other use, except as otherwise provided.

2. Requirements for the provision of parking facilities with respect to two (2) or more uses of the same or different types may be satisfied by the permanent allocation of the requisite number of spaces for each use in a common parking facility, cooperatively established and operated. The number of spaces so designated may not be less than the sum of the individual requirements for each use except as hereinafter provided, and all design requirements contained in this division must be complied with. A common parking facility so established must be located so that a major point of pedestrian access to such common facility is within a 500 foot walking distance of the entrance to each use served thereby. The Approving Authority may attach such conditions to the approval of a common parking facility as may be reasonable and necessary to assure that the use will be consistent with the purpose and intent of this Chapter.

3. In a predominantly office, multiple-use building located in the MXTD Zone with frontage on a Transit Station Link, and not part of a previously approved project plan, the number of parking spaces required may be determined by using the parking standards for office use applied over the entire floor area of the building and not on the requirements for the individual uses. Office uses must occupy more than 75% of the gross floor area of the building. If the mix of uses contains one (1) or more restaurants that, in the aggregate, exceed 4,500 square feet of gross floor area, the parking requirement for the restaurant or restaurants exceeding 4,500 square feet of gross floor area, must be calculated according to the restaurant parking standard.

4. On a lot or parcel that contains a church, synagogue, or other place of worship and an affiliated private institution, the Board of Appeals, as part of the consideration of the special exception application for the private educational institution, may grant a parking reduction of up to 30% of the total required parking for the site upon the finding that the uses on the property will not have overlapping peak hour parking requirements and the reduction will not adversely affect the site of the adjacent area.

h.~~g.~~ *Flexible Parking Standards* – The Approving Authority may permit reductions in the number of parking spaces required, if certain standards and requirements are met as set forth below.

1. *Mayor and Council and Planning Commission Reductions*

The Mayor and Council, in the approval of a project plan, or the Planning Commission in the approval of a site plan within the MXTD and MXCD Zones, have the authority to reduce the required number of parking spaces for uses in the building or buildings to be constructed~~;~~ provided that:

(i) A major point of pedestrian access to such building or buildings is within a 1,500 foot walking distance of a transit station entrance shown on the Washington Metropolitan Area Transit Authority Adopted Regional Rail Transit System; or

(ii) There are three (3) or more bus routes in the immediate vicinity of the building or buildings; or

(iii) There is a major public parking facility available to the public within 6~~5~~00 feet of a building entrance; or

(iv) Where the size of the lot is so small that meeting the parking requirement would prevent redevelopment; or

(~~i~~v) For any other good cause shown.

2. The Planning Commission may not approve a further reduction on site plans that are part of a project plan where the Mayor and Council have previously granted a reduction.

3. *Proximity to a Transit Station Reductions* - Within any mixed-use zone where the building entrance is more than 1,500 feet from a transit station entrance shown on the Washington Metropolitan Area Transit Authority Adopted Regional Rail Transit System a reduction of not more than 10% of the required parking spaces may be approved if a parking management plan approved by the Approving Authority will be implemented with occupancy of the building or buildings using such features as car and van pooling and public or private transit. A Transportation Demand Management strategy must be submitted with the goal of reducing parking demand by the building to meet the amount of reduction requested. The effectiveness of this plan must be demonstrated periodically after the use has been operating, as determined by the Approving Authority.

4. *Multiple-Unit Residential Projects* – For multiple-unit residential projects, a condition of approval of a project plan or site plan may limit parking below the normal requirements set forth in the tables in Section 25.16.03.c above.

5. *Reductions for Shared Uses* – Parking within a project application may be reduced by the appropriate percentage as shown in the parking credit

schedule for each of the five (5) time periods shown in the chart below. The number of parking spaces required is determined by totaling the resulting numbers in each column; the column total that generates the highest number parking spaces then becomes the parking requirement.

Use	***Weekday***		***Weekend***		***Night-time***
	Daytime 6 a.m. – 6 p.m.	***Evening 6 p.m. – midnight***	***Daytime 6 a.m. – 6 p.m.***	***Evening 6 p.m. – midnight***	***Midnight – 6 a.m.***
Office/Industrial	100%	10%	10%	5%	5%
General Retail	50%	90%	100%	70%	5%
Hotel, motel, inn	70%	100%	70%	100%	70%
Restaurant	50%	100%	100%	100%	10%
Indoor or legitimate, theater, commercial recreational establishment	40%	100%	80%	100%	10%
Community center, museum, civic club, private club, lodge and health and fitness establishment	50%	100%	100%	100%	10%
Residential	60%	90%	80%	90%	100%
Institutional and public uses	50%	100%	100%	30%	5%
All other uses	100%	100%	100%	100%	100%
Percentages here are a percent of the standard requirements found in 25.16.03.c.					

i~~h~~. *Deferral for Providing Spaces*

1. The Approving Authority, in considering a project plan or site plan, may

approve a deferral of providing the number of parking spaces to be provided where it can be demonstrated that the use served does not require the number of spaces otherwise required by this Section 25.16.03 due to one (1) or more of the following:

(a) The age characteristics of the patrons or tenants served;

(b) The unique character of the use being served;

(c) Proximity to a transit station; and/or

~~(d)Execution of a formal agreement to use off-site parking spaces.~~

2. Parking may be provided under an approved integrated parking demand program for a mixed-use development on City-owned land or land purchased by the applicant from the City within the MXTD Zone, or for development within a designated Parking District.

3. A deferral in providing required parking spaces may be approved by the Approving Authority to enhance or preserve the environment~~al situations~~, such as preservation of significant trees or avoiding impact on sensitive environmental areas, that warrants ~~allowing~~ a parking deferral. However, an inability to comply with the forest conservation requirements or other environment requirements is not a reason, per se, to approve a deferral.

4. Where such deferrals are allowed, the applicant must demonstrate that there is sufficient useable land area available to provide the total number of spaces that would otherwise be required. Any changes in the conditions under which the reductions were approved will require the deferred spaces to be provided in accordance with the conditions of approval of the site plan.

j.Provision for Off-Site Parking

The parking requirements set forth in Sec. 25.16.03 may be met with the execution of a formal agreement in a form satisfactory to the Chief of Planning and the City Attorney to use off-site parking spaces for some or all of the required parking.

25.16.04 – Location of Parking and Loading Facilities

a. All off-street parking and loading facilities required by this Article for any use must be located on and entirely within the same record lot with that use, unless otherwise provided in this Chapter.

b. Off-street parking and loading facilities that make it necessary for vehicles to back out directly into a public road are prohibited, except that this prohibition does not apply to the off-street parking area of one (1) single-family detached or semi-detached dwelling units.

c. All garages or other space allocated for parking of vehicles within buildings or in basements or open spaces on the roofs of buildings are considered part of the required off-street parking facilities and may be included as such in computing the area requirements outlined in this article.

25.16.05 – Location in Relation to Use Served

Requirements for the provision of parking facilities in the MXTD, and MXCD zones, and the MXNC zone within the Town Center Performance District, may be satisfied on a separate lot from the use served by a permanent automobile parking structure. An automobile parking structure must be within a 6~~5~~00 foot walking distance of the entrance to the use being served to satisfy the parking requirements. The Planning Commission may attach such conditions to the approval of an automobile parking structure as may be reasonable and necessary to assure that it will be consistent with the purpose and intent of this Chapter.

25.16.06 – Parking Design Standards

a. *Interior Drive Aisles and Turning Radii*

1. The width of interior drive aisles must not be less than:

(a) Twenty-four (24) feet when used with 70 to 90 degree angled parking, except that 20 foot wide driveways may be used in a parking structure;

(b) Eighteen (18) feet when used with 46 to 69 degree angled parking; or

(c) Fourteen (14) feet when used with parallel to 45 degree angled parking.

2. Interior driveways must not be less than 14 feet wide for one (1) direction circulation, or 18 feet wide for two (2) direction circulation.

3. Pavement directional arrows and/or signs must be provided in sufficient quantities and locations so as to ensure safe and efficient on-site traffic circulation.

4. At the entry into a parking facility from a public right-of-way, a minimum safety zone of ten feet (10') must be provided behind the right-of-way line to allow for maneuvering of vehicles within the parking facility.

5. Interior driveways may not be installed on a grade in excess of 14%. Interior drive aisles in commercial and industrial areas cannot be installed on a grade of more than ten percent (10%). This requirement may be waived by the Department of Public Works for ramps within parking structures.

b. *Parking Spaces*

1. Each automobile parking space must be a rectangle not less than nine feet (9') wide and 18 feet long, except as follows:

   (a) Spaces provided for the physically handicapped and aged must be in accordance with the Maryland Building Code for the Handicapped.

   (b) For parallel parking spaces, the length must be increased to a minimum of 21 feet. In addition:

      (i) Adequate interior driveways and entrance and exit driveways must be provided to connect each public parking space with a public street; except that,

      (ii) Where parking of vehicles by attendants is provided, at least 50% of all parking spaces must have direct access to interior entrance and exit driveways.

2. Parking spaces must not be installed on a grade in excess of five percent (5%).

3. All parking spaces must be separated from walkways, sidewalks, roads, streets, or alleys by curbing and all roads, streets, alleys, sidewalks, walkways, and lot lines must be protected from vehicular overhang by wheel bumpers or curbs. Wheel bumpers or curbs must be installed at least five feet (5') from a street right-of-way line.

4. For purposes of computing the area of any public parking space hereunder, a parking space may extend beyond a wheel bumper or curb provided that:

   (a) The computed area of such parking space does not extend beyond a wheel bumper or curb more than two feet (2') as measured along the side of the space which extends the greatest distance beyond the wheel bumper or curb; and

   (b) The computed area of such parking space does not extend beyond a wheel bumper or curb which is more than six inches (6") high, and the area of overhang is free of all obstructions above curb height.

5. Each parking space must be clearly marked and adequate pavement directional arrows or signs provided.

6. No off-street parking area can contain more than 150 spaces. If a greater number of spaces is required by this article, separate parking areas of not more than 150 spaces must be provided and must be separated by a landscaped area at least ten feet (10') in width.

7. In considering a project plan or site plan, the Approving Authority may allow parking spaces on private streets to be applied towards the total parking requirement for the development.

c. *Entrance and Exit Driveways*

1. Driveways for single-unit residential or duplex dwellings must have a width of not less than ten feet (10').

2. For all other uses, there must be at least two (2) one-direction driveways 15 feet in width or one (1) two-direction driveway 25 feet in width, except that two-direction driveways on four (4) lane or wider highways or within the central business district must be between 25 and 35 feet in width. The number, type, and width of such driveways must be as reasonably determined by the Approving Authority.

3. In the MXE, MXNC, and MXCD Zones, vehicular access to a secondary residential street is prohibited.

4. In the MXE, I-L, and I-H Zones, vehicular access to any residential street is prohibited.

d. *Paving Specifications*

All off-street parking and loading areas must be so drained as to prevent damage to abutting properties or public streets and must be paved with a minimum of:

(a) Six inches (6") of concrete; or

(b) Six inches (6") of bituminous asphalt; or

(c) Six inches (6") of compacted gravel and two inches (2") of bituminous asphalt; or

(d) Other paving as approved by the Director of the Department of Public Works.

e. *Internal Landscaping of Surface Parking Areas* – See Section 4.d.~~1~~ of the Landscaping, Screening, and Lighting Manual.

f. *Pedestrian Walkways in Parking Facilities* – In addition to all required parking spaces and driveways, pedestrian walkways, sidewalks, and crosswalks must be provided in all off-street parking facilities where necessary for pedestrian and cycling safety. Such walkways and sidewalks must be protected from vehicular encroachment by wheel stops or curbs. ~~Efforts should be made to link p~~Pedestrian walkways and bike travel lanes shall be linked with ~~pedestrian~~ walkways and lanes in adjacent parking facilities and with entrances to buildings and public sidewalks and bike facilities. All pedestrian ways that cross private travel ways must be provided with crosswalks acceptable to the Department of Public Works.

g. *Lighting Requirements* – Lighting for parking facilities must be provided in accordance with the provisions of Article 17 and the Landscaping and Lighting Manual.

h. *Loading Facilities*

1. For any building in any industrial~~,~~ or mixed-use zone, adequate off-street space for the loading and unloading of goods and materials must be provided, taking into consideration the size of the building and the uses allowed in such zone.

2. Each loading space provided must have a minimum width of 12 feet, clearance height of at least 14 feet, and a depth sufficient to accommodate the maximum length of delivery trucks reasonably likely to serve the building. In the event that intermediate tractor-trailer (WB-50) loading or unloading is reasonably likely, a depth of 60 feet must be provided. Loading space shall be located so that trucks will not obstruct pedestrian or vehicle traffic movement or project into any public right-of-way. Maneuvering area must provide a turning radius of not less than 48 feet.

25.16.07 – Parking Structures Design

a. In addition to the provisions of Section 25.16.06 above, parking garages must be designed so as to be as open as possible, have sufficient lighting, and easily visible compatible stairways and elevator lobbies. The exterior design should match or be compatible with the other structures on the site or adjacent to the garage.

b. Entry to a garage not having direct access to a public street must be indicated by sufficient signage on-site.

c. Automated directional sign systems may be installed. There must be a readily legible indication from the street of the status of available parking within the structure.

d. Where a parking structure confronts residential development, the design must not allow headlights to shine through the structure.

25.16.08 – Automated Parking Structures

Automated parking structures may be used to meet all or a portion of the required off-street parking requirements. Such structures may be freestanding or used in conjunction with parking garages. If freestanding, they must be located only in the rear yard, and screened from adjoining properties with landscaping, walls, or other means, and comply with all noise standards.

25.16.09 – Bicycle Parking

a. *Purpose* – The purpose of the bicycle parking standards are:

1. To encourage bicycling as an alternate mode of transportation by providing adequate bicycle parking at common destinations;

2. To ensure safe and convenient parking spaces for bicycles; and

3. To address the need for and to provide both short-term and long-term bicycle parking.

b. *General Requirements*

1. Section 25.16.03 sets forth the required minimum number of bicycle parking spaces for each use category. Bicycle parking is calculated based on predicted demand generated by the use categories and on the security for bicycle parking necessary to encouraging bicycling as a form of transportation.

2. Primary uses on a site are the determining factor when calculating bicycle parking spaces. Accessory uses do not have bicycle parking requirements.

3. If a site has two (2) primary uses, the parking requirement is the sum of the required bicycle parking for the individual primary uses.

c. *Standards*

1. *Short-Term Bicycle Parking*

(a) *Purpose* – Short-term bicycle parking provides incentives to visitors to use bicycles through convenient placement of short-term bicycle parking.

(b) *Design* – The following standards must be met for required short-term bicycle parking:

(i) Short-term bicycle parking should be located at a building's main entrance and should be clearly visible to pedestrians and bicyclists.

(ii) Short-term bicycle parking must consist of racks or lockers meeting the standards of Article 25.16.09.c.3.

(iii) Short-term bicycle parking must be within the following distances of the main entrance:

A. *Building Having One (1) Entrance* – Measuring by the most directly accessible pedestrian route, the bicycle parking must be within 50 feet of the main entrance to the building when a building has only one (1) main entrance.

Figure 1

Short-term bike parking - one building, one entrance

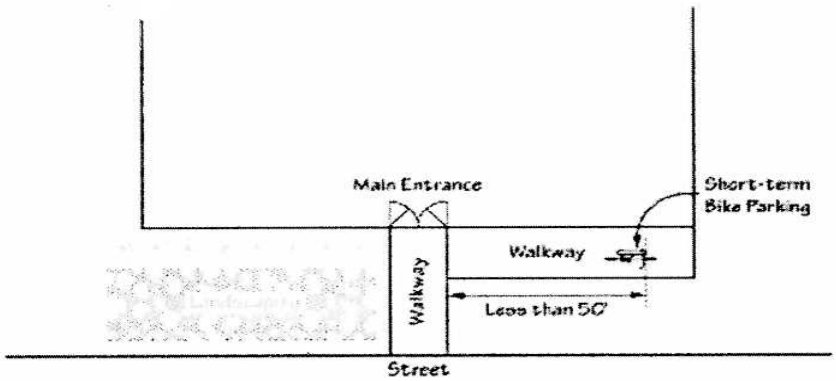

Figure 16.1

B. *Building Having More Than One (1) Main Entrance* – Measuring by the most directly accessible pedestrian route, bicycle parking must be along all building frontages with a main entrance, and

within 50 feet of at least one (1) main entrance on each building frontage that has a main entrance when a building has more than one (1) main entrance.

Short-term bike parking – one building, multiple entrances

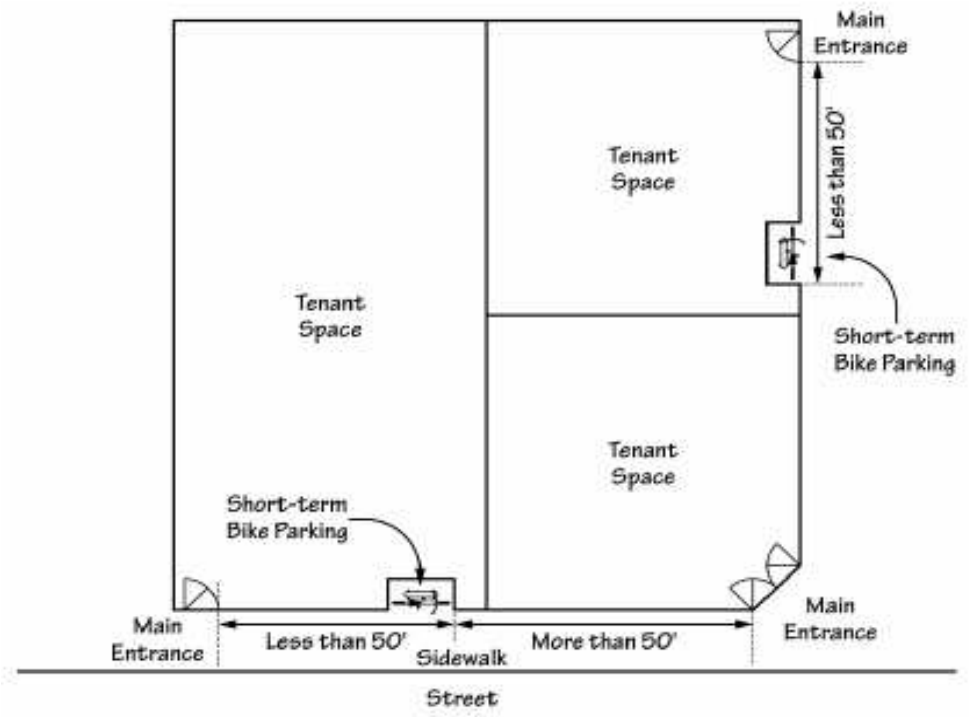

Figure 16.2

C. *Bicycle Parking For a Building or Multiple Buildings or Entries within a Campus Setting* – Measuring by the most directly accessible pedestrian route, bicycle parking must be within 50 feet of a main entrance or all entrances for a building or multiple buildings or entries within a campus setting.

D. *Sites With More Than One (1) Primary Building, with Exception to an Institutional Campus* - measuring by the most directly accessible pedestrian route, bicycle parking must be distributed to serve all primary buildings and be within 50 feet of ~~a~~ the main entrance for sites with more than one (1) primary building, with exception of an institutional campus.

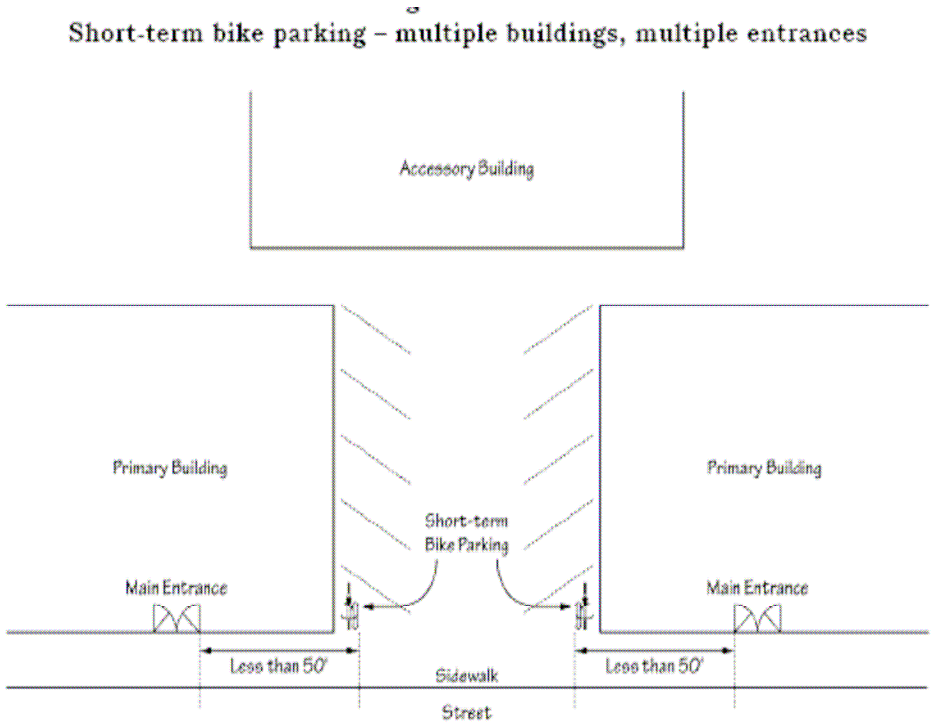

Figure 16.3

(iv) Each short-term bicycle parking space must be at least two feet (2') by six feet (6').

Examples of Bicycle Parking Layouts

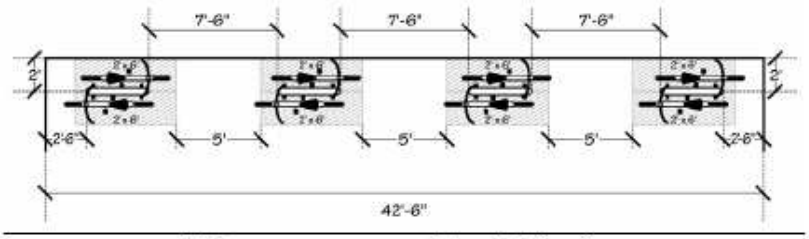

This area accommodates 8 bicycles.

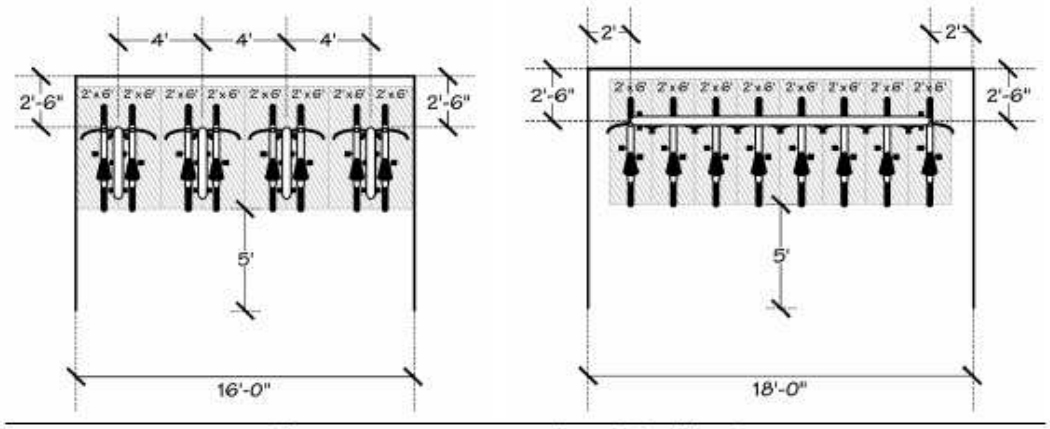

These areas accommodate eight bicycles.

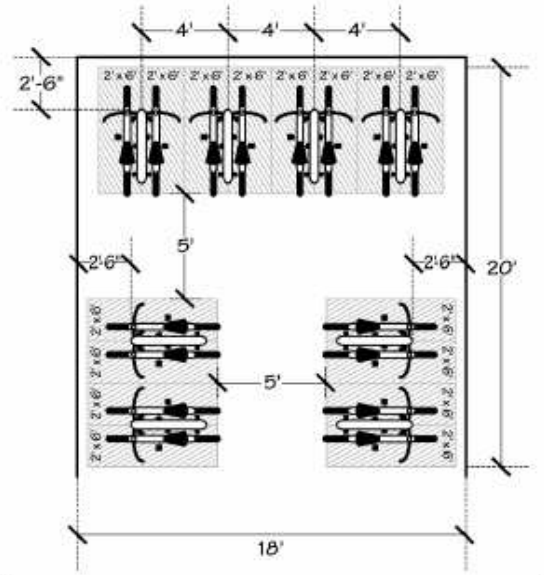

This area accommodates sixteen bicycles.

Figure 16.4

~~(c) *Bicycle Parking Fund Contribution* - In instances where the provisions of this Section 25.16.09 cannot be met, contribution to the Bicycle Parking Fund administered by the Department of Public Works may be required at the time of site plan or project plan review.~~

2. *Long Term Bicycle Parking Standards*

(a) *Purpose* – Long-term bicycle parking provides secure and weather-protected areas to park bicycles for those staying at a site for several hours.

(b) *Standards* – Required long-term bicycle parking must meet the following standards:

(i) Long-term bicycle parking must be supplied through racks or lockers that meet the standards of Article 25.16.09.c.3.

(ii) Long-term bicycle parking must be covered in accordance with the standards of 25.16.09.c.3.(e).

(iii) Long-term bicycle parking must be positioned on the site or in an area where the closest point is within 300 feet of the principle entrance.

(iv) Where long-term bicycle parking spaces are required for office use categories, for every 50,000 square feet of Gross Floor Area (GFA), one (1) shower per gender must be installed, up to a maximum of three (3) showers per gender. Showers must be accessible to all tenants of the building.

(v) Where long-term bicycle parking spaces ~~is~~ are required for office use categories, a minimum of one (1) clothes storage locker per gender must be installed for every long-term bicycle parking space. The lockers must be installed adjacent to the showers in a safe and secured area and be accessible to all tenants.

(vi) To heighten security, long-term bicycle parking must be in at least one (1) of the following locations:

A. In a locked room;

B. In an area enclosed by a fence with a locked gate. The fence must be floor-to-ceiling or 8 feet high;

C. In an area visible by an attendant or security guard;

D. Within 100 feet of an attendant or security guard;

E. In an area monitored by a security camera; or

F. Contained within a dwelling unit or dormitory unit. If long-term bicycle parking is provided in a dwelling unit or dormitory unit, neither racks nor lockers are required.

3. *Additional Standards for All Bicycle Parking*

(a) *Purpose* – The purpose of these standards is to ascertain that the design of the required bicycle parking allows bicycles to be locked securely and conveniently, protecting ~~from~~ bicycles from damage.

(b) *Bicycle Lockers* – The Department of Public Works provides standards for bicycle lockers. Lockers must be securely anchored where required bicycle parking is provided in lockers.

(c) *Bicycle Racks* – The Department of Public Works maintains a handbook of racks and site location guidelines that meet the standards of this subsection. Floor, wall, or ceiling racks are acceptable locations for required bicycle parking. Bicycle racks must meet the following standards:

(i) If both wheels are left on the bicycle, the bicycle frame and one (1) wheel can be locked to the rack with a high security lock;

(ii) A six foot (6') long bicycle can be securely held with its frame supported, providing that the bicycle cannot be pushed or fall in a manner that will damage the wheels or components; and

(iii) The rack must be securely anchored.

(d) *Maneuvering and Parking Areas*

(i) Each required bicycle parking space must be accessible without moving another bicycle.

(ii) To allow room for bicycle maneuvering, an aisle must be placed at least 5 feet wide behind all required bicycle parking.

(iii) The area designated for bicycle parking must be hard surfaced.

(iv) If the bicycle parking is adjacent to a sidewalk, the maneuvering

area may extend into the right-of-way.

(e) *Covered Parking*

(i) Long-term bicycle parking must be covered.

(ii) If possible, short-term bicycle parking should be covered.

(iii) Covered parking can be provided by locating the bicycle parking inside buildings, in bicycle lockers, under roof overhangs, awnings, canopies, or within or under other structures.

(iv) Where required covered bicycle parking is not within a building or locker, the cover must be:

A. Permanent;

B. Protect the bicycle from rain and snow; and

C. Exist a minimum of seven feet (7') above the floor or ground.

(f) *Use of Required Parking Spaces*

(i) Shoppers, customers, messengers, and other visitors to the site must be given access to use required short-term bicycle parking spaces.

(ii) Employees, students, residents, commuters, and those who stay at the site for several hours must be given access to use required long-term bicycle parking spaces.

(g) *Signs*

(i) A sign must be posted at a light rail station or transit center indicating the location of the bicycle parking if required bicycle parking is not able to be seen from the transit station link or transit center.

(ii) A sign must be posted at the main building entrance, for uses other than transit station links or transit centers, indicating the location of the bicycle parking if required bicycle parking is not visible from the street or main building entrance.

Article 17 – Public Use Space, Landscaping and Screening, Utility Placement and Screening, Lighting, Sidewalks, and Shadows

25.17.01 – Public Use Space

a. *Purpose* – Public use space requirements are intended to promote an appropriate balance between the built environment, ~~and~~ public parks and other open spaces intended for respite from urban development, and to protect natural features~~, and protect~~ and preserve the character of the City.

b. *General Requirements* – Where provided, such space must be accessible for use and enjoyment by the general public, and may include space so located and treated as to enhance the amenity of the development by providing landscaping features~~, screening,~~ or a general appearance of openness. The Approving Authority may allow reasonable limitations on access to the public use space to meet safety or security concerns.

c. *Dedication of Public Use Space* – Land may be dedicated to the City for public use in connection with the approval of a site plan or subdivision for the purpose of providing public parks, ~~green~~ open areas, or recreation areas that will be owned and operated as part of the City's public park system. Dedication must be made consistent with the recommendations of the relevant Plan indicating the locations where such public use space is desired.

d. *Fee in Lieu of Public Use Space Requirements*

1. The Approving Authority may approve the payment of a fee in lieu of some or all of the public use space requirement under ~~one (1) or more~~ any of the following circumstances:

(a) ~~The required area is too small to provide an effective, usable public use space;~~

~~(b)~~ The City could use the fee to provide and/or improve another more usable public space in the vicinity of the project; or

(b~~c~~) The site cannot realistically provide the required area for public use and meet all of the other city development standard requirements.

~~2.The foregoing circumstances are presumed to have been met where there is the option to pay fee-in-lieu of some or all of the public use space requirement pursuant to Sec. 25.13.05.c.5.~~

~~3.~~2. Any approved fee in lieu of the public use space requirement shall be paid in an amount ~~to be~~ set by resolution of Mayor and Council.

e. *Exemption for Affordable Housing Projects or for Housing for Senior Adults and Persons with Disabilities.* Projects that consist entirely of affordable dwelling units, defined as units designated for households with incomes at or below the area median income limits, are exempt from the public use space requirement. Also, projects including housing for senior adults and persons with disabilities is also exempt from the public use space requirement.

25.17.02 – Landscaping and Screening

a. *Landscaping,* ~~*and*~~ *Screening and Lighting Manual* - Landscaping and screening is required in all zones in accordance with the Landscaping, ~~and~~ Screening and Lighting Manual and the Forest and Tree Preservation Ordinance (Chapter 10.5 of the Code). The Landscaping, ~~and~~ Screening and Lighting manual provides information and guidance on matters such as:

1. How to prepare landscape plans;

2. Appropriate use of plants;

3. Screening requirements (including items such as depth, maintenance, location, etc.);

4. Maintenance; and

5. Lighting standards.

b. *Approving Authority Requirements* - The Approving Authority may impose reasonable requirements relating to the nature and type of the screening for any such lot, and may require additional screening in such manner and of such materials that may be reasonably necessary to adequately screen such lot from view from the adjacent residential street.

c. *Screening of Parking Areas Required in the MXT Zone* – In the MXT Zone, off-street parking areas required by this Chapter must be screened, ~~in such a manner and~~ to the extent ~~reasonably required in order~~ possible, to minimize the visibility of such areas to residential zones and to public streets and walkways.

d. *Screening of Mechanical Equipment Required in All Zones Other Than Single Dwelling Unit Residential Zones* – In all zones other than the Single Dwelling Unit Residential Zones, all air conditioning equipment, transformers, elevator equipment, and similar mechanical equipment on any roof, ground, or building

must be screened from public view at ground level from the edge of the property. Such screening must be done in such a manner and with such materials as may be reasonably required. *Mechanical equipment on roofs should be limited to the extent possible, and in no case can it exceed the coverage provisions of Sec. 25.09.06.b.*

e. *Screening of Trash, Recycling, and Waste Oil/Grease Collection Areas Enclosures Required in All Zones Other Than Single Dwelling Unit Residential Zones Z,ones* – In all zones other than the Single Dwelling Unit Residential Zone, all trash recycling, and waste oil/grease collection storage areas shall be inside a building or screened in such a manner and with such materials as may reasonably be required. Trash recycling, and waste oil/grease collection area enclosures should not be located next to residential development. Where such enclosures are visible from residential development or from a public street, they shall be constructed of materials complementary to the building architecture.

25.17.03 – Underground Installation of Utility Lines Required; Screening or Underground Installation of Transformers; and Equipment Lockers Required

a.Underground Installation of Utility Lines and Cables –

1.a. *Underground Installation Required* – In all zones, electric, telecommunication, television, (including cable) and other utility lines and cables must be installed underground in connection with the development or redevelopment of any land wherever an extension or relocation of a contiguous segment of said lines or cables is required in connection with such development or redevelopment. All underground lines and cables shall be placed in a public utility easement, or otherwise on private property. No utilities may be placed in the public right-of-way or on City property without the express written permission of the City, and subject to such terms and conditions that the City may require.

2.Exception – In all zones, for good cause shown, the Planning Commission may approve the extension and/or relocation above ground of electric utility lines not providing direct permanent service in connection with the development or redevelopment of any land within a comprehensive planned development, provided that any such extension and/or relocation may be approved by the Chief of Planning for any application filed prior to December 1, 1995. Conditions may be attached to any such approval in order to ensure the health, safety, and welfare of persons and property in the neighborhood. Notwithstanding the above, prior to the issuance of an occupancy permit for any development or redevelopment within a comprehensive planned development south of Wooton Parkway and east of Interstate 270, any electric utility lines providing direct service to the development, which have been

~~previously approved for extension and/or relocation above ground, must be installed underground.~~

b. *Placement of Utility Equipment* – Except as otherwise provided, all electrical equipment~~,~~ (including transformers~~,~~ and equipment cabinets), telecommunications equipment, and television equipment (including cable television) shall be located as follows:

1. In all residential zones, electrical, telecommunications, and television equipment must be placed below ground or in an enclosed building.

2. In the MXTD, MXCD, MXT, MXE, MXB and MXNC Zones, electrical, telecommunications, and cable television equipment must be placed underground or in an enclosed building.

3. In all other zones, electrical, telecommunications, and television equipment may be placed above ground and outside of an enclosed building only if the following requirements are satisfied:

   (a) Screening is required on four (4) sides of the equipment at a minimum of 80% opacity. This screen may consist of either vegetative or building materials. The side for access may be a gate.

   (b) Vegetative screening must use plant material that will result in 80% opacity within one (1) growing season.

   (c) Screening made of building materials must be designed in a manner that is complementary to the ~~existing~~ building architecture including material and scale.

   (d) Where practical, all above ground electrical, telecommunications, and television equipment not incorporated into a building must be clustered with other utility equipment and dumpsters, trash enclosures, and generators, and shall be located in an inconspicuous manner so as to blend in with the landscaping and topography of the site. The side of the screening enclosure that provides access to the equipment must be oriented and either gated or screened in a manner that provides access while minimizing the visual impacts of the equipment.

   (e) The location and screening of all above ground electrical, telecommunications, and television equipment must be approved by the Approving Authority as part of the applicable site plan review.

4. *Exceptions* - The provisions of this subsection b do not apply to wireless communication facilities, related structures~~,~~ and equipment, installed in accordance with the provisions of Section 25.09.08.

~~c.~~c. *Waiver of Requirements*

1. Upon finding that installing utility equipment within an enclosed building is not feasible, the Planning Commission may grant a waiver of any requirement of this Section~~, 25.17.03, for the placement of equipment underground~~ for any of the following reasons:

   (a) A unique or peculiar site condition provides a physical impediment to installing equipment underground; or

   (b) It would be unsafe to locate the equipment underground; or

   (c) The equipment cannot successfully operate below ground.

2. The Planning Commission may allow equipment that has been placed underground to be reinstalled above ground if the owner of such equipment can demonstrate and fully document that such equipment has resulted in service degradation in violation of state or federal laws or regulations or contrary to the terms of any governing contractual agreements, and that reasonable improvements in maintenance and/or equipment cannot restore and/or improve the quality of service.

3. All utility equipment installed above ground pursuant to this subsection c must satisfy the location and screening requirements of subsection b. 3.

~~4.~~3. All equipment must comply with the noise requirements of Chapter 31B of the Montgomery County Code, as amended.

25.17.04 – Lighting

a. *Purpose* – The purposes of lighting requirements are to:

   1. Protect against glare and spillover of light onto adjacent properties or into the sky;

   2. Protect against glare onto public rights-of-way that can impair vision of motorists, pedestrians, and bicyclists;

3. Increase nighttime utility, safety, security, and productivity of the sites where lighting is provided;

4. Foster the nighttime use of property; and

5. Protect the privacy of residents.

b. *Lighting Manual* – Lighting must be provided in accordance with the requirements and guidelines of the *Landscaping, Screening and Lighting Manual* approved by resolution of the Mayor and Council. This manual will provide information and guidance on matters such as:

1. Design of light fixtures;

2. Types of bulbs;

3. Cut-off requirements;

4. Height of light standards;

5. Recommended maximum and minimum foot-candles;

6. Special provisions for high-density and entertainment districts; and

7. Other appropriate provisions.

25.17.05 – Sidewalks

a. *Purpose* – The purposes of sidewalk provisions are to:

1. Encourage a safe pedestrian-oriented environment;

2. Help create a visually attractive streetscape;

3. Provide connectivity among surrounding properties and uses;

4. Promote overall commerce; and

5. Provide attractive pedestrian connections to transit centers.

b. *Sidewalk Guidelines* – Sidewalk shall be provided and designed using the applicable standards as follows:

1. In cases where sidewalk standards are recommended in the Plan or ~~within design guidelines~~ other documents adopted by the Mayor and Council, such standards must be complied with.

2. In Mixed Use Zones, sidewalks shall be provided pursuant to Article 13.

3. In all other zones, sidewalks shall be provided according to the table below.

~~2.The following table sets forth the design guidelines for sidewalks in specific locations not otherwise regulated above:~~

Sidewalk Design Standards~~Guidelines for Areas Other Than Single Unit Detached Residential Areas~~[1]

	Normal Minimum[4]
Buffer/Tree Lawn[2]	7 feet
Clear Path	6 feet
Amenity/Safety Area (if provided)	2 feet
TOTAL[3]	**15 feet**

Notes:
1. Minimum widths may be waived by the Approving Authority for short portions of a private sidewalk for a good cause shown.
2. Tree lawn width is measured from the back of the curb to the edge of the sidewalk.
3. The Total width is from back of curb to building face.
4. See the City of Rockville Bike Master Plan for more details on bikeway requirements.

4. ~~3. Except as otherwise provided in subsections 25.17.05.b. 1 and 2 above,~~ In Single Unit Detached Residential Zones, sidewalks must meet the minimum requirements of the "Standards and Details for Construction" manual issued by the Department of Public Works, the requirements of the Americans with Disabilities Act, and any other provisions of Chapter 21 of the City Code.

25.17.06 – Shadows, General Regulations

a. In the MXTD, MXCD, MXE, IH, and RMD-25 Zones, developments must be so planned in relation to one another that no building will cast a shadow between 10:00 a.m. and 2:00 p.m. on December 21 on existing or approved structures that

are principally (i.e., 50% or more) residential or on existing designated historic structures. This requirement does not apply to residential towers in a single development separated by a distance at least equal to the height of the tallest residential building in the proposed development and having a length less than ten percent (10%) greater than width.

b. Areas designed or intended for use as publicly-accessible use space, parks, or other green area must be located where they will receive direct sun for a cumulative total of at least two (2) hours between the hours of 8 a.m. and 4 p.m. on December 21.

25.17.07 – Environmental Guidelines

a. *Purpose* – All development must be accomplished in accordance with the *Environmental Guidelines* adopted by resolution of the Mayor and Council.

b. *General Allowance of Certain Environmental Facilities* – Rain barrels, rain gardens, and other nonstructural environmental facilities are permitted, as needed.

Article 18 – Signs

25.18.01 – Legislative Findings; Purposes

a. *Legislative Findings* – The Mayor and Council finds that signs provide an important medium through which individuals and entities may convey a variety of commercial and noncommercial messages. However, left completely unregulated, signs can become a threat to public safety as a hazard to property, persons, and the motoring public, and a detriment to property values and the overall public welfare as an aesthetic nuisance.

b. *Purposes* – In addition to the purposes of this Chapter established in 25.01.02, the purposes of this Article are:

   1. To enable the public to locate goods, services, facilities, and geographic areas without difficulty, danger, or confusion;

   2. To reduce traffic and pedestrian hazards and prevent interference with the effectiveness of traffic regulation;

   3. To promote the compatibility of signs with the surrounding land uses;

   4. To protect the public investment in the roadways in the City;

   5. To promote and preserve the economic well-being and vitality of the community;

   6. To enhance and improve the environment of the City and to protect property values by preventing visual clutter and blight;

   7. To preserve the residential character of the City's residential neighborhoods; and

   8. To provide effective opportunities for the expression of commercial and noncommercial communication while protecting the public and the community against adverse affects from the unrestricted proliferation of signs.

25.18.02 – Severability

a. Without diminishing or limiting in any way the declaration of severability in Section 25.01.08 it is the express intent of this Section that if any provision (including any section, sentence, clause, or phrase) of this Article 18 or any other provision of this Chapter pertaining to signs, including but not limited to provisions pertaining to sign permits, is declared by a court of competent

jurisdiction to be unconstitutional and void, such declaration of unconstitutionality does not affect any other provision of this Article 18 or other provision of this Chapter, including, but not limited to, the prohibition of certain signs, and the requirements pertaining to the size, height, location, numbers, illumination, maintenance, construction, and removal of signs.

b. In particular, and without limitation, in the event any provision of this Article 18 or other provision of this Chapter is declared invalid as applied to noncommercial signs, this Article 18 or any surviving portions thereof, remain in full force and effect as applied to commercial signs.

c. Without diminishing or limiting in any way the foregoing declaration of severability, it is the express intent of this Section, 25.18.02, that if any provision (including any section, sentence, clause, or phrase) of this Article 18 or any other provision of this Chapter pertaining to signs is declared by a court of competent jurisdiction to be unconstitutional and void, such declaration of unconstitutionality does not affect any other provision of this Article 18 or other provision of this Chapter even if such severability would result in a situation where there would be less speech, whether by subjecting previously exempt signs to the provision of this Chapter or otherwise.

25.18.03 - Special Application Requirements for the Sign Review Board

In addition to the general provisions pertaining to the Sign Review Board found in 25.04.05 and general provisions for applications in Article 5, applications authorized in this Article 18 must:

1. Be submitted in writing to the Sign Review Board at least ten (10) calendar days prior to the meeting at which it is to be considered;

2. Be submitted on forms provided by the Sign Review Board and be accompanied by such fee as is determined by resolution of the Mayor and Council; and

3. Include as part of the application such information as may reasonably be required by the Sign Review Board including:

   (a) The street address of the property upon which the sign is to be located and a plat map of the property showing the proposed location of the sign and identifying any adjacent residential property;

   (b) The aggregate area for all tenant / business signs erected by or on behalf of the applicant and/or the aggregate area for all signs on the premises;

(c) The name(s) and address(es) of the owner(s) of the premises upon which the subject sign is to be located;

(d) Consent of the owner(s), or the owner's(') agent, granting permission for the placement or maintenance of the sign;

(e) The name, address, phone number, and business license number of the sign contractor;

(f) Plans indicating the location of the sign on the property or building wall, including the road frontage and/or building elevation; and

(g) Plans indicating the dimensions, height, and shape of the sign, and materials, and mounting details.

4. *Expiration of Sign Review Board's Approval.*

(a) *Installation of Sign* - A sign must be installed within six (6) months of the Sign Review Board's decision authorizing such sign, unless another time frame is provided within this Chapter or the decision of the Sign Review Board, or the approval shall expire.

(b) *Extension* - The Sign Review Board may, for good cause shown, grant no more than two (2) extensions of not more than six (6) months each for any prior grant of approval subject to the provisions for an extension of Section 25.05.08, "Extension of Implementation Period".

25.18.04 – Only Permitted Signs Lawful; Signs Specifically Prohibited

a. No sign shall be erected, installed, substantially altered, or illuminated unless in compliance with all of the requirements of this Chapter.

b. The following signs are specifically prohibited in the City:

1. Signs that impede the operation of any window, door, fire escape, stairway, ladder, or opening required to provide light, air, ingress, or egress for any building or structure;

2. Signs which, by reason of position, size, shape, or color, may interfere with, obstruct the view of, or be confused with any traffic sign, signal, or device, or which make use of any word, phrase, symbol, or character in such a manner as to interfere with, mislead, or confuse traffic;

3. Off-premises signs;

4. Freestanding signs in the shape or form of any person, animal, vegetable, product, or animation of any of the foregoing;

5. Any sign placed or erected on property without the permission of the property owner;

6. Signs which move or have any moving part, or which give the illusion of motion;

7. Signs which use blinking, flashing, or fluttering illumination or illumination which varies in color or intensity or which create the appearance or illusion of writing or printing, including, but not limited to, strobe, rotating beacon, chasing, or zip lights;

8. Signs erected by any person on any public property or right-of-way except for signs as may be directed by the City Manager;

9. Signs erected in such a location as to interfere with pedestrian or vehicular circulation onto or off of the property on which it is located;

10. Portable signs;

11. Signs mounted, attached, or painted on trailers, boats, or motor vehicles when used as additional identification or advertising signs on or near the premises;

12. Signs with changeable copy, except as provided for herein;

13. Signs extending above the roof of any building in excess of one percent (1%) of the building height;

14. Flags, banners, pennants, spinners, ribbon, streamers, balloons, and similar devices, except as expressly permitted by this Article;

15. Signs projecting more than 36 inches from a building wall; and

16. Any sign with words, scenes, or graphics of an obscene, indecent, or prurient character which offend public morals or decency.

25.18.05 – Exemptions

This Article does not apply to:

1. Any sign erected inside of any building and not visible from the exterior thereof;

2. Any sign erected inside of any building and visible outside of such building through a window, provided such sign is set back at least ten feet (10') from the nearest window;

3. Signs inside a building within ten feet (10') of any window not exceeding 20% of the area of a window unit;

4. Traffic control signs and speed indicator signs;

5. Any sign erected by or at the direction of, any governmental body having jurisdiction over the property or the right-of-way on which the sign is located;

6. Any sign or portion thereof required to be posted or displayed by this Chapter or other applicable Federal, State, or local law or regulation;

7. One (1) private flag when displayed with the flag of the United States and the State or political subdivision, provided such private flag must not be larger than the other flags displayed;

8. Signs located on public or private recreational facilities on parcels of five (5) acres or more, provided that such signs are not intended to be readable from a public way;

9. Any ornamental flag or stationary structure, device, material, or thing of a noncommercial decorative nature extending from a wall or pole located on residential property or around parking or pedestrian areas in the interior of non-residential property and not designed to attract the attention of those traveling on a public way; or

10. Numerals not exceeding 18 inches in height identifying the address of a dwelling unit or building.

25.18.06 – Construction, Design, Illumination, and Maintenance of Signs

a. *Permanent Signs*

1. *Construction* – Permanent signs must be permanently attached to the ground, a building, or another structure by direct attachment to a rigid wall, frame, or structure.

(a) Signs attached to masonry, concrete, or steel must be safely and securely fastened by means of metal anchors, bolts, or approved expansion screws of sufficient size and anchorage to safely support the loads applied.

(b) Where wood anchors or supports are embedded in the soil, the wood must be pressure treated with an approved preservative.

2. *Design* – Permanent signs must be designed and constructed to withstand wind pressure as provided for in the current edition of the International Building Code, as amended, or in such other code adopted as the Building Code for the City.

3. *Illumination* – When illumination of a sign is permitted, it must satisfy the following requirements:

(a) A sign must not be illuminated by other than electrical means, and electrical devices and wiring must be installed in accordance with the requirements of the National Electrical Code, as amended, or such other code adopted as the Electrical Code for the City.

(b) Sign illumination must use an enclosed lamp design or indirect lighting from a shielded source in a manner that prevents glare from beyond the property line.

(c) Sign illumination must not cause traffic interference.

b. *Temporary Signs*

1. *Construction* – Temporary signs must:

(a) Not be constructed in a manner that requires a building or electrical permit; and

(b) Be securely anchored to the structure or land in which it is located.

2. *Design* – Temporary signs must not have changeable copy.

3. *Illumination* – Temporary signs must not be illuminated in any manner.

c. *Maintenance*

1. All signs and sign support structures, together with their supports, braces, guys, and anchors, must be maintained in good structural condition, in

compliance with all applicable building and electrical codes, and in conformance with this Article at all times.

2. The display surfaces of all signs must be kept neatly painted or posted at all times.

25.18.07 – Measurement of Sign Area and Height

a. *Sign Area*

1. Sign area includes the total areas of all permitted signs, except as otherwise provided for herein.

2. Sign areas are measured as follows:

(a) For sign copy mounted or painted on a background panel or area distinctively painted, textured, lighted, or constructed as background for the sign copy, sign area is measured as that area contained within the outside dimensions of the background panel or surface.

Figure 18.1

(b) For sign copy mounted as individual letters and/or graphics on an area of a building that has not been painted, textured, lighted, or otherwise altered to provide a distinctive background for the sign copy, sign area is measured as the area or the sum of the areas enclosed by the smallest rectangle that will enclose each word and graphic.

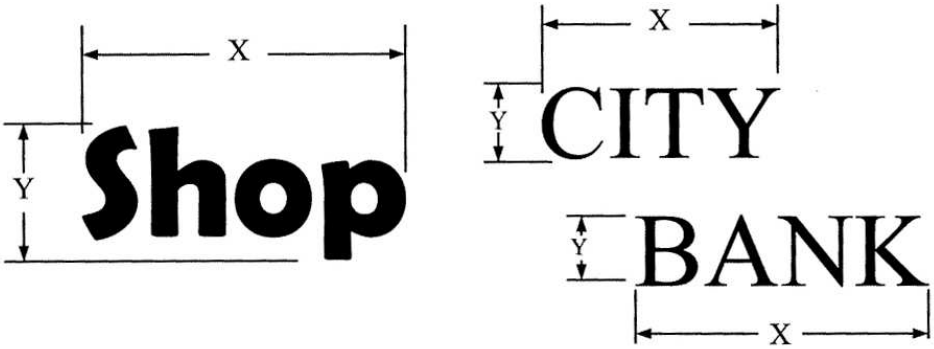

Sign Area = X times Y

Figure 18.2

(c) For freestanding signs or projecting signs not more than two (2) sign faces shall be allowed. If the interior angle between the two (2) sign faces is 90 degrees or less, the area of only one (1) face will be the sign area. If the angle between the two (2) faces is greater than 90 degrees, the sign area will be the sum of the areas of the two (2) faces.

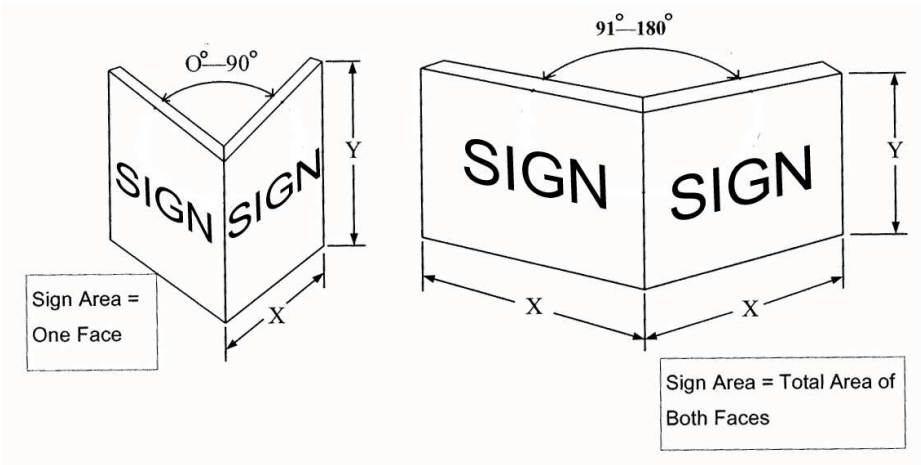

Figure 18.3

(d) For a freestanding sign, the sign area will be the area that will encompass all components of the sign excluding the supporting structure that does not form part of the sign proper.

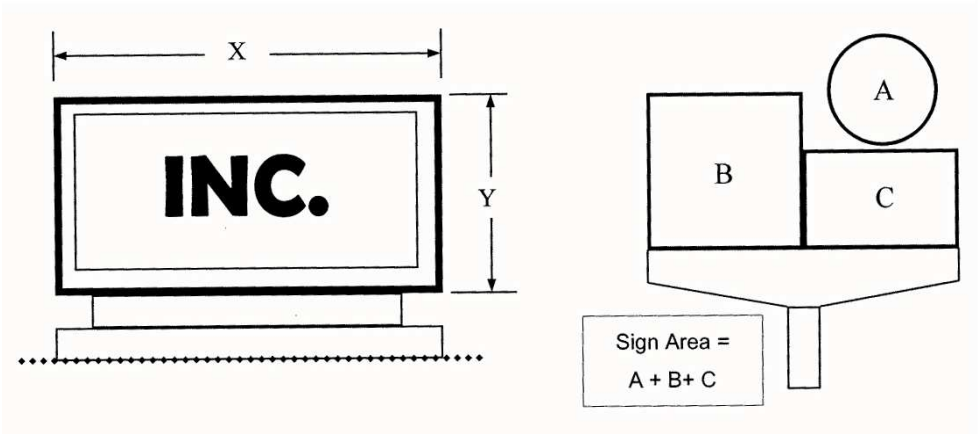

Figure 18.4

b. *Sign Height* – Sign height is measured from the distance at the top of the sign structure to the level of the street upon which the sign faces or to the level of the lot on which the sign is erected, whichever is higher.

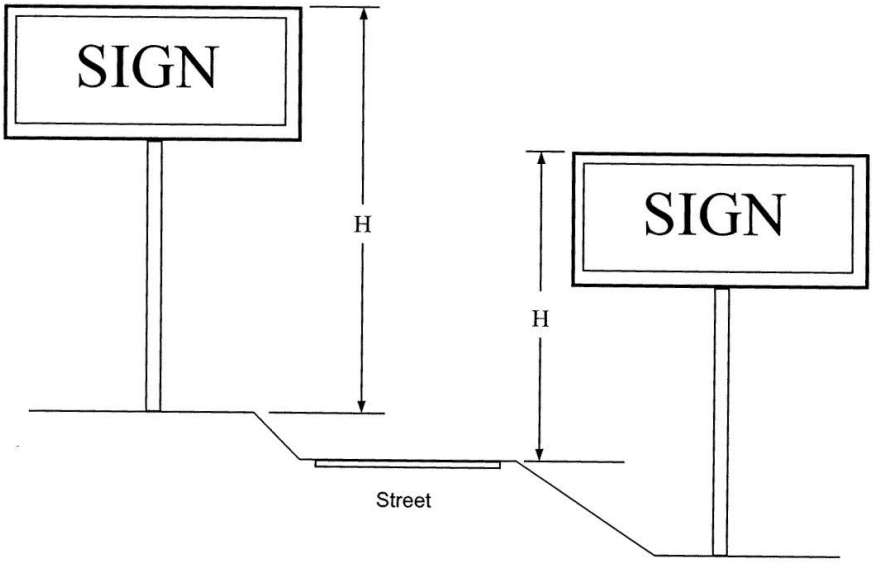

Figure 18.5

25.18.08 – Sign Permits; Appeals

a. Except as expressly exempted or otherwise provided in this Article, a sign permit must be obtained prior to the installation, erection, enlargement, illumination, or

substantial alteration of any permanent or temporary sign allowed under this Article. The changing of the sign face is a substantial alteration requiring a new sign permit.

b. Applications shall be submitted to the Chief of Inspection Services.

c. Each application shall be submitted on forms provided therefor by the Chief of Inspection Services, and be accompanied by such fee as is established by resolution of the Council. The applicant shall furnish as part of the application the following information:

1. The street address of the property upon which the sign is to be located and a plat map of the property showing the proposed location of the sign and identifying any adjacent residential property;

2. The aggregate area for all tenant/business signs erected by or on behalf of the applicant and/or the aggregate area for all signs on the premises;

3. The name(s) and address(es) of the owner(s) of the premises upon which the subject sign is to be located;

4. Consent of the owner(s), or the owner's(’) agent, granting permission for the placement or maintenance of the sign;

5. The name, address, phone number, and business license number of the sign contractor;

6. Plans indicating the location of the sign on the property or building wall, including the road frontage or building elevation;

7. Plans indicating the dimensions, height, and shape of the sign, and materials, and mounting details;

8. The size and type of any vegetation required to be moved for sign installation or visibility; and

9. Such other information pertaining to the requirements of this Article as may reasonably be required by the Chief of Inspection Services.

d. The Chief of Inspection Services must review the application within 15 business days from the date of submission of the application and required fee and either approve or deny the application or return the application to the applicant if the application is incomplete as follows:

1. A sign permit must be issued if the Chief of Inspection Services finds that the sign proposed in the application complies with the requirements of this Article.

2. If the permit is denied, the denial must be in writing and must specify the specific section or sections of this Article or other applicable law with which the proposed sign(s) is inconsistent.

3. If the application is returned due to incompleteness, the Chief of Inspection Services must advise the applicant in writing as to the information needed to complete the application.

4. Failure of the Chief of Inspection Services to take action on an application within the time frame set forth above is appealable to the Sign Review Board in the same manner as an appeal from a denial of a permit.

e. An applicant may appeal the denial of a sign permit by filing a sign permit review application with the Sign Review Board within ten (10) business days of the decision of the Chief of Inspection Services.

f. No permit for a sign issued hereunder shall be deemed to constitute permission or authorization to erect or maintain an unlawful sign, nor shall any permit issued hereunder constitute a defense in any action to remove an unlawful sign.

25.18.09 – Nonconforming Signs

a. Whenever an existing sign is altered, it must be modified to bring it into conformance with this Chapter.

b. Whenever an existing business / tenant erects a new or additional sign, all signs on the premises pertaining to that business / tenant must be modified to bring them into conformance with this Chapter.

c. Any sign lawfully existing immediately prior to the effective date of this Chapter, or any application amendment thereof, but which does not conform to the requirements as now constituted or as it may hereafter be amended from time to time, must be removed within eight (8) years from the date that the sign became nonconforming.

d. In all other respects, nonconforming signs must comply with the applicable requirements of Article 8, Transitional Provisions, Nonconformities, Nonconforming Alteration Approval.

25.18.10 – Removal of Signs

a. *Prohibited Signs on Public Property / Rights of Way* – Any prohibited sign found on any public property or right-of-way within the City will be removed and disposed of by the Chief of Inspection Services or designee in the same manner as trash. Nothing herein prohibits the imposition of a fine or initiation of any other enforcement action against any person or entity found to have installed a prohibited sign on any public property or right-of-way within the City.

b. *Unlawful Sign* – Any sign unlawfully existing immediately prior to the effective date of this Chapter, or any applicable amendment thereof, and which does not conform to the requirements of this Article, as now constituted or as it may be amended from time to time, must be removed by the owner after notice from the City to do so.

c. *Elections and Other Event Signs* – Any sign that pertains to an event, activity, or purpose of a limited time or duration must be removed within seven (7) days of the conclusion of the event, activity, or purpose to which it pertains.

d. *Abandoned Signs*

1. An abandoned sign must be removed within 30 days from the time the activity on the premises ceases and/or the business of owner vacates the premises by:

   (a) The sign's owner;

   (b) The owner of the property on which the sign is located; or

   (c) Any other persons otherwise responsible for the sign.

2. Removal consists of the removal of the portion of the conforming sign identifying the business, tenant, entity, service, owner, product, or activity that is no longer located on the premises and installation of temporary replacement face where applicable. Nonconforming signs are subject to the provisions of 25.18.09.

25.18.11 – Signs Permitted for Residential Uses in All Zones

The following signs are permitted for residential uses in all zones:

1. *Identification Signs* – Each dwelling unit may have permanent occupant identification signs, including a single sign for a valid home occupation or child care center located on a lot less than 20,000 square feet, in accordance with the following:

(a) The total aggregate of all such signs must not exceed 150 square inches;

(b) The signs may be a building sign or freestanding;

(c) If freestanding, the signs must not be illuminated in any manner; and

(d) No sign permit is required.

2. *Entrance Signs* – Permanent entrance signs for residential developments or a subdivision containing ten (10) or more dwelling units in accordance with the following:

   (a) One (1) sign not exceeding 24 square feet in area with a maximum height of five feet (5') in height located at or near the entrance to the development or subdivision within the boundaries of such development or subdivision;

   (b) Where the dwelling units are separately owned, such sign must be located in an easement or tract of land to be owned and/or maintained by the Home Owners Association, civic association, or similar entity;

   (c) Final location of such sign must be approved by the Director of the Department of Public Works or designee, to ensure that the sign does not obstruct the visibility of motorists; and

   (d) Such sign must be located in a landscaped area of at least two (2) square feet per each square foot of sign area.

3. *Directional Signs* – Directional signs for residential developments or a subdivision of any size is permitted in accordance with the following:

   (a) Such signs must not exceed three (3) square feet in area; and

   (b) If freestanding, such signs must not exceed six feet (6') in height.

4. *Temporary Signs* – The following temporary signs:

   (a) *Real Estate Signs for Individual Residential Lots or Dwelling Units*

      (i) One (1) building or freestanding sign per street frontage not exceeding six (6) square feet in area and, if free standing, not exceeding five feet (5') in height, provided that any sign installed within ten feet (10') from the property line must not exceed 42 inches in height;

(ii) Such signs must not be illuminated; and

(iii) No sign permit is required.

(b) *Real Estate Signs for Recorded Subdivision* – For recorded subdivisions containing ten (10) or more lots, signs must comply with the following:

(i) One (1) sign per subdivision not exceeding 48 square feet in area and, if freestanding, not exceeding 12 feet in height located within the subdivision;

(ii) Such signs must not be illuminated;

(iii) Such signs may be maintained for a period of two (2) years, or until all the lots in the subdivision are sold, whichever occurs first; and

(iv) Sign permits are required and are renewable for such signs.

(c) *Real Estate Signs for New or Renovated Multi-Unit Dwelling Developments*

(i) For developments containing up to ten (10) dwelling units, signs must comply with the following:

A. One (1) sign per street frontage not exceeding 12 feet in height located on the property;

B. Such signs must not be illuminated; and

C. No sign permit is required for such signs.

(ii) For developments containing more than ten (10) dwelling units, signs must comply with the following:

A. One (1) sign per street frontage not exceeding 48 square feet in area and, if freestanding, not exceeding 12 feet in height located on the property;

B. Such signs must not be illuminated;

C. Such signs may be maintained for a period of two (2) years, or until all the units in the development are rented, sold, or leased whichever occurs first; and

D. Sign permits are required and are renewable for such signs.

(d) *Temporary Noncommercial Signs*

(i) *General Provisions for Temporary Noncommercial Signs*

A. ~~Temporary noncommercial signs must not exceed an aggregate of 12 square feet per residential lot;~~

~~B.~~ If freestanding, such signs must not exceed five feet (5') in height, provided that any sign installed within ten feet (10') from the property line must not exceed 42 inches in height;

B~~C~~. Such signs must not be illuminated; and

C~~D~~. No sign permit is required for such signs.

(ii) *Yard Sale Signs* – In addition to the general provisions for temporary noncommercial signs provided in Subsection 4.(d)(i), above, property owners holding a yard sale are permitted to erect signs on their own property in accordance with the following:

A. Signs must not exceed four (4) square feet in area per sign;

B. Signs must not be displayed for a period longer than two (2) days during any calendar month; and

C. Signs must be removed upon the conclusion of the sale.

25.18.12 – Signs Permitted for Nonresidential Uses in Residential Zone

a. *Signs for Permitted Uses* – For a church, synagogue, or other place of worship and other permitted nonresidential uses in a residential zone, except for child care homes and child care centers located on lots under 20,000 square feet the following signs are permitted in Residential zones:

1. One (1) permanent sign, not exceeding 24 square feet in area for each street frontage

(a) If freestanding, it must not be located less than ten feet (10') from any lot line; and

(b) The sign may contain changeable copy.

2. Directional signs, provided that:

   (a) Such signs do not exceed three (3) square feet in area; and

   (b) If freestanding, such signs must not exceed six feet (6') in height.

b. *Signs for Special Exceptions* – For non-residential special exception uses in residential zones:

   1. All signs shall be as permitted by the Board of Appeals in its approval of the special exception application, except that the Board of Appeals may not permit any sign prohibited under Section 25.18.04.

   2. Residential special exceptions valid on December 31, 1983 have the following options:

      (a) One (1) sign not exceeding 20 square feet in area is allowed. It may be a building sign or freestanding. If freestanding, the sign must not exceed five feet (5') in height; or

      (b) A qualified ~~application~~ applicant may apply to the Board of Appeals for an amendment to existing sign conditions in compliance with Section 25.15.01.b.

c. *Temporary Real Estate Signs* – Temporary real estate signs are permitted for all nonresidential uses in residential zones in accordance with the provisions of Section 25.18.11.4.(a).

d. *Temporary Noncommercial Signs* – Temporary noncommercial signs are permitted in accordance with the provisions of Section 25.18.11.~~d.4~~ 4.(d).

25.18.13 – Signs Permitted in MXNC, MXC, and Industrial Zones

a. *Permanent Building Signs* – Permanent building signs are permitted in the Mixed-Use Neighborhood Commercial (MXNC), Mixed-Use Commercial (MXC), and Industrial (I-L and I-H) Zones in accordance with the following:

   1. *Total Aggregate Area*

      (a) The total aggregate area of all signs on the premises allowed for each business/tenant must not exceed:

(i) Two (2) square feet for each linear foot of exterior building wall enclosing the business/tenant space up to a maximum of 50 square feet.

(ii) If such building wall or portion thereof measures more than 50 linear feet, then the aggregate area of all signs on the premises for that business/tenant may be increased in area at the rate of one (1) square foot for each linear foot of exterior building wall in excess of 50 linear feet.

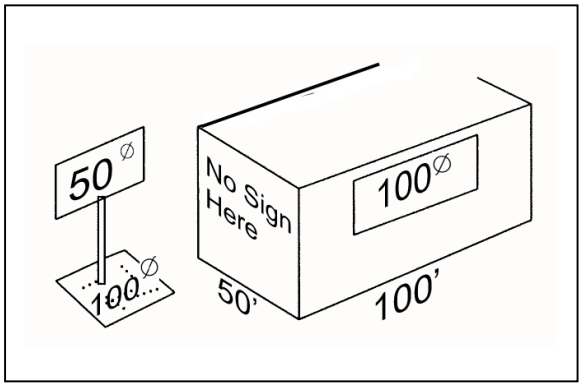

Figure 18.6

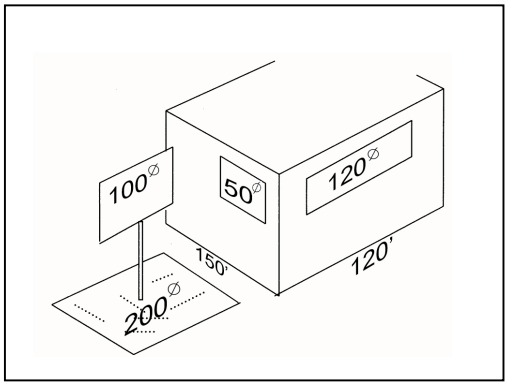

Figure 18.7

(b) For business/tenant space with multiple exterior building walls, each exterior wall may be so measured. All signs must be placed on the exterior building wall or portion thereof used for measurement.

2. *Design*

(a) For a lot occupied by more than one (1) business/tenant, each building sign must be compatible and harmonious (but not necessarily identical) in terms of design, color, shape, size, style, material, and mounting with all other signs on the building or in the center.

(b) A proposal for the entire building or center must be submitted by the owner prior to the issuance of the first sign permit after the effective date of this Article for either a new or existing development.

3. *Additional Signs for Multiple Tenants* – Buildings occupied by four (4) or more businesses/tenants may have one (1) additional building sign with a maximum area of 50 square feet located on an exterior wall.

b. *Freestanding Signs*

1. Freestanding signs are permitted in the Mixed-Use Commercial (MXC) Zone in accordance with the following:

   (a) One (1) freestanding sign is permitted per record lot;

   (b) Such sign must not exceed a maximum area of 50 square feet and a maximum height of six feet (6');

   (c) Such sign must not use internal illumination;

   (d) Such sign must not be located within ten feet (10') from any lot line;

   (e) A landscaped area ~~of native plants~~ must be provided at the base of the freestanding sign, with the landscaped area to be a minimum area of two (2) square feet of sign area; and

   (f) Freestanding signs that contain the name, logo, or trademark of more than one (1) business, place, organization, building, or person must meet the following requirements in addition to those listed above:

      (i) Lettering for the identification of the building/center must not be less than 18 inches in height;

      (ii) Lettering for the identification of individual businesses/tenants and other copy must not be less than ten inches (10") in height;

      (iii) The design of the sign shall be internally consistent and harmonious in color, size, style, material, and mounting; and

      (iv) The design of the sign shall be consistent and harmonious with the sign plan and architecture for the entire building or center.

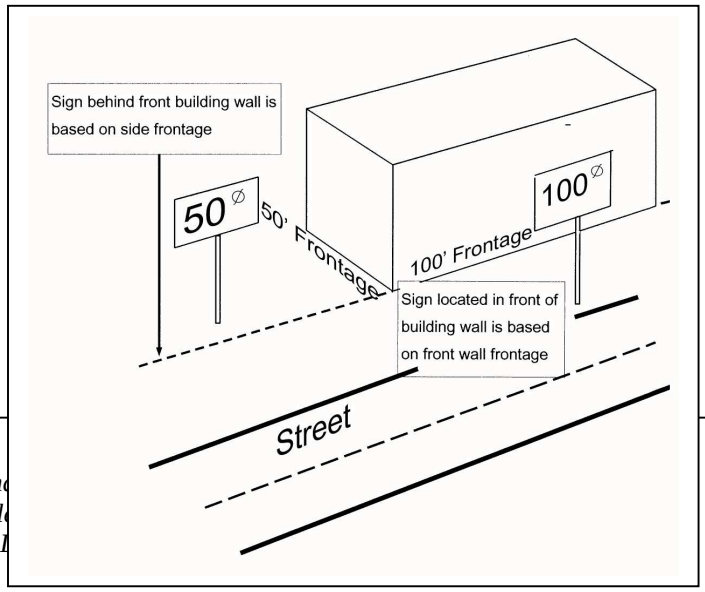

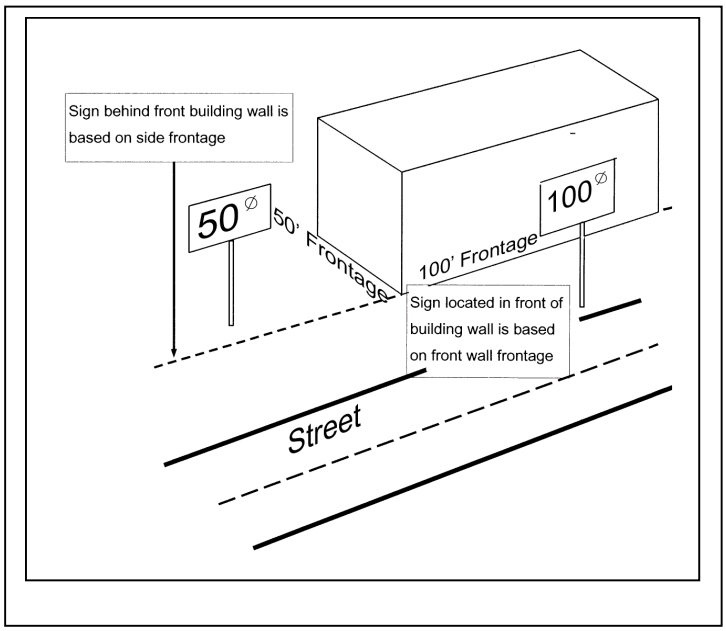

Figure 18.8 - Freestanding Signs

2. Freestanding signs are permitted in the MXNC Zone in accordance with the following:

   (a) Freestanding signs that identify a single business/tenant shall be counted as a portion of the total aggregate sign area allowed for that business/tenant.

   (b) Other freestanding signs, including those that identify a multi-tenant building or center, shall not be counted in the aggregate sign area allowed for any individual business/tenant. Such signs must be in accordance with the following:

      (i) There shall be only one (1) freestanding sign per record lot;

      (ii) Such signs must have a maximum area of 50 square feet and maximum height of then (10) feet;

      (iii) The freestanding sign must be counted as a portion of the aggregate sign area of the most proximate exterior building wall;

      (iv) Such signs must not be closer than 30 feet to any residential zone; <u>and</u>

(v) Freestanding signs that contain the name, logo, or trademark on more than one (1) business, place, organization, building, or person must in addition to the requirements above, satisfy the following additional requirements:

A. Lettering for the identification of the building /center must not be less than 18 inches in height;

B. Lettering for the identification of individual business/tenants and other copy must not be less than ten inches (10") in height;

C. The design of the sign must be internally consistent and harmonious in color, size, style, material, and mounting; and

D. The design of the sign must be consistent and harmonious with the sign plan and architecture for the entire building or center.

3. Freestanding signs are permitted in the I-L and I-H Zones in accordance with the following:

(a) Freestanding signs that identify a single business/tenant shall be counted as a portion of the total aggregate sign area allowed for that business/tenant.

(b) Other freestanding signs, including those that identify a multi-tenant building or center, shall not be counted in the aggregate sign area allowed for any individual business/tenant. Such signs must be in accordance with the following:

(i) There shall be only one (1) freestanding sign per record lot;

(ii) Such signs must have a maximum area of 50 square feet and a maximum height of ten feet (10');

(iii) The freestanding sign must be counted as a portion of the aggregate sign area of the most proximate exterior building wall;

(iv) Such signs must not be closer than 30 feet to any residential zone; <u>and</u>

(v) Freestanding signs that contain the name, logo, or trademark of more than one (1) business, place, organization, building, or person must, in addition to the requirements above, satisfy the following additional requirements:

A. Lettering for the identification of the building/center must not be less than 18 inches in height;

B. Lettering for the identification of individual businesses/tenants and other copy must not be less than ten inches (10”) in height;

C. The design of the sign must be internally consistent and harmonious in color, size, style, material, and mounting; and

D. The design of the sign must be consistent and harmonious with the sign plan and architecture for the entire building or center.

Figure 18.9 -

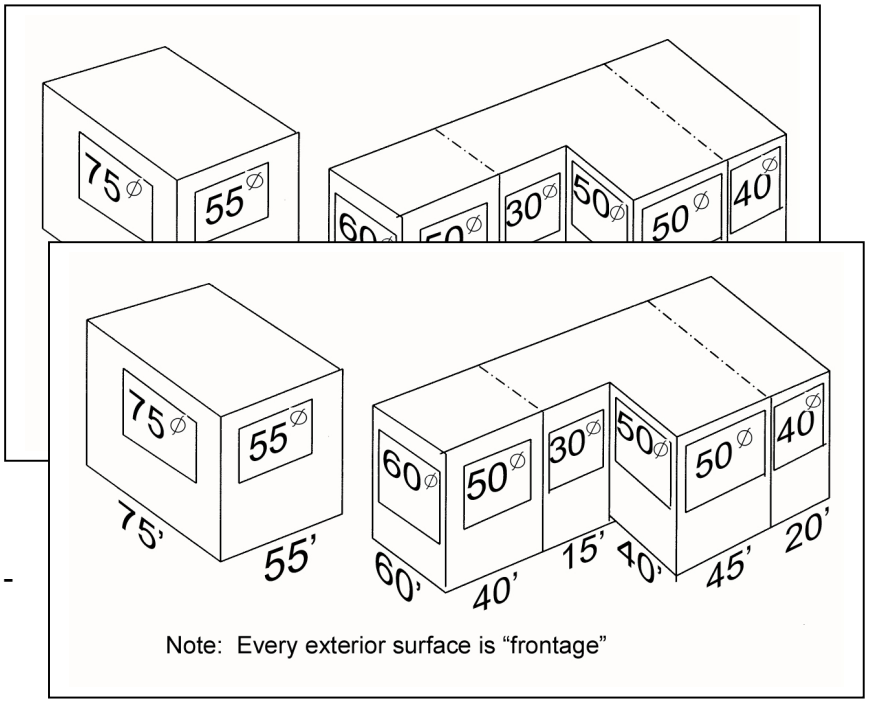

Freestanding Signs

c. *Additional Signs* – Additional signs are permitted in Mixed-Use Neighborhood Commercial (MXNC), Mixed-Use Commercial (MXC), and Industrial (I-L and I-H) Zones in accordance with the following:

1. Buildings or centers occupied by four (4) or more businesses/tenants may have one (1) additional sign, with one (1) entry per business/tenant.

2. Letters must be a maximum height of three inches (3”) and must be consistent in style.

3. Such sign may be erected as a building sign or freestanding sign not intended to be readable from a public way.

4. If freestanding, such sign must not exceed a maximum of 50 square feet in area and a maximum height of ten feet (10’).

d. *Directional Signs* – Directional signs in the Mixed-Use Neighborhood Commercial (MXNC), Mixed-Use Commercial (MXC), and Industrial (I-L and I-H) Zones are permitted in accordance with the following:

1. The sign must not exceed three (3) square feet in area; and

2. If freestanding, the sign must not exceed six feet (6’) in height.

e. *Gasoline Price Signs* – In the Mixed-Use Neighborhood Commercial (MXNC), Mixed-Use Commercial (MXC), and Industrial (I-L and I-H) Zones, gasoline price signs required by State law for automobile filling stations may be freestanding or erected as a building sign. Any such sign or portion thereof that exceeds the minimum requirements of State law must be counted in the number, size, and total aggregate area for the business/tenant.

f. *Changeable Copy Signs* – Changeable copy signs are permitted in the Mixed-Use Neighborhood Commercial (MXNC), Mixed-Use Commercial (MXC) and Industrial (I-L and I-H) Zones to announce current and future entertainment productions. Such sign may be freestanding and shall be counted in the number, size, and aggregate sign area permitted for the business/tenant.

g. *Temporary Signs* – Temporary signs are permitted in the Mixed-Use Neighborhood Commercial (MXNC), Mixed-Use Commercial (MXC) and Industrial (I-L and I-H) Zones in accordance with the following:

1. One (1) real estate sign per lot not exceeding 48 square feet in area, and not more than 12 feet in height if freestanding, or one (1) building sign not exceeding 72 square feet in area if mounted at least 70 feet above adjacent grade, in accordance with the following:

(a) Such signs must not be illuminated;

(b) Such signs may be maintained for a period of two (2) years or until the building or lot is rented, leased, or sold, whichever occurs first. Signs must be removed within 30 days after sale, lease, or rental. Signs installed for a

two (2) year renewal period are limited to a maximum size of 24 square feet; and

(c) Such signs must not be located within 30 feet of a residential zone.

2. One (1) sign may be erected during the period of construction with a total maximum sign area of 72 square feet.

3. Upon occupancy of a space by a business or tenant, banners, pennants, and displays not exceeding 32 square feet in total area may be erected for up to 60 consecutive days including days before or after actual occupancy date by the business or tenant.

4. Temporary noncommercial signs are permitted in the Mixed-Use Commercial (MXC) and Industrial (I-L and I-H) zones in accordance with the provisions of Section 25.18.14.a.4.(b).

h. *Subdivision Entrance Signs* – In the Industrial zones, permanent signs within recorded subdivisions of four (4) or more lots are permitted in accordance with the following:

1. One (1) sign is permitted, not exceeding 50 square feet in area and not exceeding six feet (6') in height.

2. Such sign must be located at or near the entrance to the subdivision within the boundaries of the subdivision.

3. Final location of such sign must be approved by the City Traffic Engineer to ensure that the sign does not obstruct the visibility of motorists.

4. Such sign must be located in a landscaped area of at least two (2) square feet per each square foot of sign area.

5. Such sign must not use internal illumination.

25.18.14 - Signs Permitted in Other Mixed-Use Zones

a. The following signs are permitted in the MXT Zone:

1. Permanent building signs in accordance with the following:

(a) The total area of all building signs must not exceed 15 square feet on any building;

(b) Such signs must not utilize internal illumination; and

(c) Such signs must not be placed above the first-story level of any building;

2. Permanent freestanding signs in accordance with the following:

(a) One (1) freestanding sign is permitted for each record lot or project not exceeding eight (8) square feet in area and not exceeding five feet (5') in height;

(b) Such sign must not utilize internal illumination; and

(c) Such sign must be located not less than ten feet (10') from a lot line of any lot used principally for a residence;

3. Directional signs in accordance with the following:

(a) Such sign must not to exceed three (3) square feet in area; and

(b) If freestanding, not to exceed six feet (6') in height;

4. Temporary signs in accordance with the following:

(a) One (1) real estate sign per lot not exceeding 24 square feet in area and eight feet (8') in height, in accordance with the following:

(i) Such signs must not be illuminated;

(ii) Such signs may be maintained for a period of two (2) years or until the building or lot is rented, leased, sold, whichever occurs first; and

(iii) Such signs must not be located within 30 feet of a residential zone.

(b) Temporary noncommercial signs are permitted in accordance with the following:

(i) The total aggregate area of all such signs on a single lot must not exceed 32 square feet;

(ii) If freestanding, such signs must not exceed eight feet (8') in height;

(iii) Such signs must not be illuminated;

(iv) Such signs must not be located within 30 feet of a residential zone;

(v) No single sign may exceed 12 square feet in size;

(vi) Such signs must not be displayed for more than 60 consecutive days and for not more than a total of 60 days within a calendar year; and

(vii) No sign permit is required for such signs.

b. Signs permitted in the MXTD, MXCD, MXB, and MXE Zones:

1. *Permanent Building Signs* - Permanent building signs are permitted in the MXTD, MXCD, MXB, and MXE Zones in accordance with the following:

(a) *MXTD and MXCD Zones*

(i) The total aggregate area of all signs on the premises allowed for each business/tenant must not exceed:

A. Two (2) square feet for each linear foot of exterior building wall enclosing the business/tenant space up to a maximum of 50 square feet.

B. If such building wall or portion thereof measures more than 50 linear feet, then the aggregate area of all signs on the premises for that business/tenant may be increased in area at the rate of one (1) square foot for each linear foot of exterior building wall in excess of 50 linear feet.

(ii) For a lot occupied by more than one (1) business/tenant, each building sign must be consistent and harmonious in terms of design, color, shape, size, style, material, and mounting with other such signs on the building or in the center. A proposal for the entire building or center must be submitted by the owner prior to the issuance of the first sign permit for either a new or existing development.

(iii) In the MXTD Zone, signs allowed for an individual business/tenant in a multi-tenant building must be placed only on pedestrian levels of the building.

(iv) In addition to the above, buildings occupied by two (2) or more businesses/tenants may have building signs with a maximum area of 50 square feet each located on any exterior wall that has frontage on the public right-of-way.

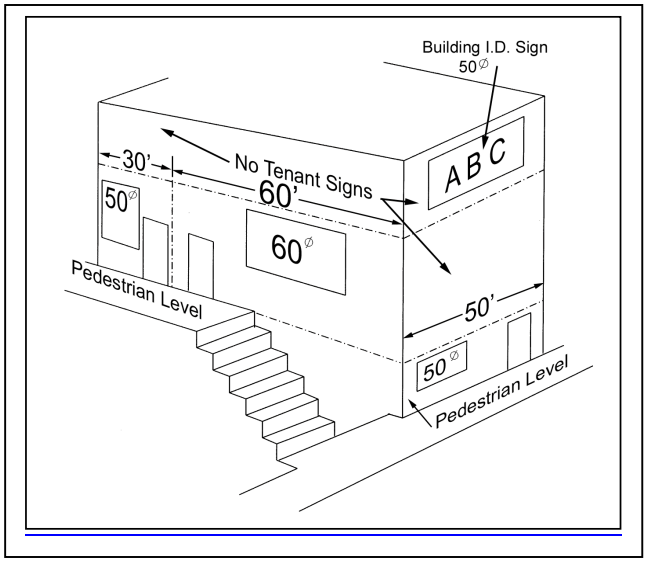

~~F~~Figure 18.10 - Building Signs (1)

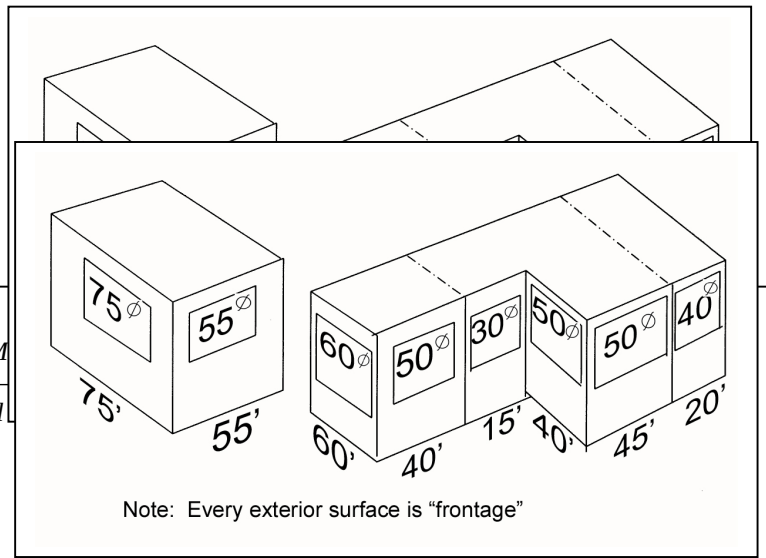

Figure 18.11 - Building Signs (2)

(v) One (1) small, portable "sandwich board" sign may be allowed as follows:

A. The sign must be located directly in front the business to which it refers;

B. Each sign face cannot exceed 4 square feet in area; and

C. The sign must not be placed where it will impede pedestrian traffic on the sidewalk, nor can it be placed in such a way as to impede vehicle traffic.

(b) *Total Aggregate Area – MXE and MXB Zones~~e~~*

(i) The total area of all signs erected on a record lot in the MXE and MXB Zones must not exceed 250 square feet.

(ii) For a lot occupied by more than one (1) business/tenant, each building sign must be consistent and harmonious in terms of design, color, shape, size, style, material, and mounting with other such signs on the building or in the center. A proposal for the entire building or center must be submitted by the owner prior to the issuance of the first sign permit for either a new or existing development.

(c) *Optional Comprehensive Sign Package* – An applicant for new development or comprehensive redevelopment of a multi-tenant project may submit a comprehensive sign program to the Sign Review Board that deviates from the above requirements of subsection b.1, above.

(i) The Sign Review Board may approve such a comprehensive sign package provided that:

A. If the maximum size otherwise allowed for any sign is increased, the total square footage of all signs on the project must not exceed the maximum aggregate total signage area permitted in ~~this~~ subsection b.1, above.

B. Not withstanding any variation among the signs in design, color, shape, size, style, material, or mounting, the signs must be compatible with each other and with the surrounding properties.

(ii) In reviewing a proposed comprehensive sign package, the Sign Review Board must consider:

A. The size, shape, color, design elements, and location of the signs;

B. The compatibility of the proposed signs with the surrounding properties, the proximity of other signs, and the characteristics of the area where the signs are to be located; and

C. Any recommendations from the Chief of Planning or the Planning Commission.

(iii) The Sign Review Board may impose such conditions and terms when approving a comprehensive sign package, that are reasonably necessary to satisfy the purpose and intent of this Article.

2. *Freestanding Signs*

(a) Freestanding signs are permitted in the MXTD Zone in accordance with the following:

(i) One (1) freestanding sign is permitted per record lot;

(ii) Such sign must not exceed a three feet (3’) by eight inches (8”) with a maximum height of six feet (6’);

(iii) Such sign must not use internal illumination;

(iv) Such sign must not have a separate supporting structure; and

(v) Final location of such sign must be approved by the Director of the Department of Public Works, or their designee, to ensure motorist visibility.

(b) Freestanding signs are permitted in the MXCD Zone in accordance with the following:

(i) Freestanding signs that identify a single business/tenant must be counted as a portion of the total aggregate sign area allowed for that business/tenant. Other freestanding signs, including those that identify a multi-tenant building or center, must not be counted in the aggregate sign area allowed for any individual business/tenant. Such signs must be in accordance with the following:

A. One (1) freestanding sign for each record lot. On record lots larger than five (5) acres, one (1) freestanding sign shall be permitted on each street frontage on a major highway or business district street. Where more than one (1) freestanding sign is permitted, they shall be erected at least 100 feet apart;

B. Such signs must not exceed a maximum area of 100 square feet and a maximum height of 20 feet, provided that the area of a freestanding sign must not exceed the aggregate sign area allowed for the premises as measured by the most proximate building wall;

C. The freestanding sign shall be counted as a portion of the aggregate sign area of the most proximate exterior building wall;

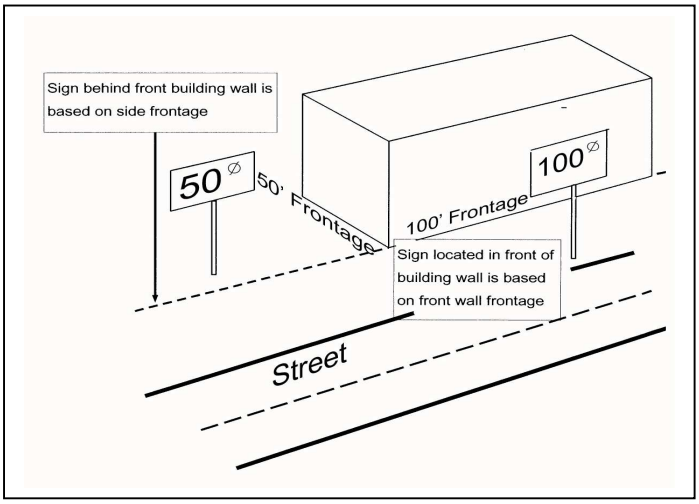

Figure 18.12 - Freestanding Signs

D. Such signs must not be closer than 30 feet to any residential zone;

E. A landscaped area ~~of native plants~~ must be provided at the base of the freestanding sign, with the landscaped area a minimum area of two (2) square feet for each square foot of sign area; and

F. The design of the sign shall be compatible and harmonious with the sign plan and architecture for the entire building or center.

(ii) Freestanding signs that contain the name, logo, or trademark of more than one (1) business, place, organization, building, or person must satisfy the requirements set forth in subsections b.2.(b)(i)A. through F. of this Section, 25.18.14, plus the following additional requirements:

A. Lettering for the identification of the building/center must not be less than 18 inches in height;

B. Lettering for the identification of individual businesses/tenants and other copy must not be less than ten inches (10”) in height;

C. The design of the sign must be internally consistent and harmonious in color, size, style, material, and mounting; and

D. The design of the sign must be consistent and harmonious with the sign plan and architecture for the entire building or center.

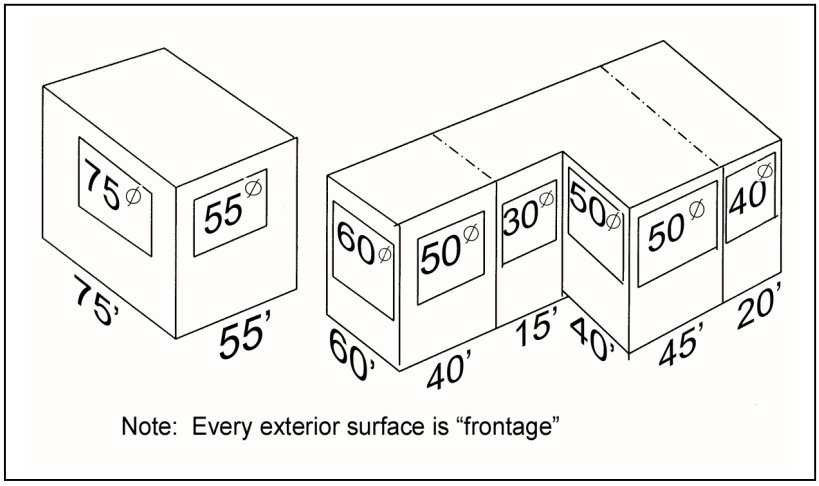

Figure 18.13 - Freestanding Signs

(c) Freestanding signs are permitted in the MXE Zone in accordance with the following:

(i) Freestanding signs must be counted as a portion of the total aggregate sign area of the lot;

(ii) One (1) freestanding sign for each record lot not exceeding 100 square feet in area and not exceeding 20 feet in height is allowed. Such sign must be located not less than 50 feet from any lot line;

(iii) In addition, record lots which abut a limited access highway may have one (1) additional freestanding sign not exceeding 50 square feet in area and not exceeding five feet (5') in height to be located at the principal point of ingress to such lot and not less than ten feet (10') from any lot line;

(iv) A landscaped area ~~of native plants~~ must be provided at the base of the freestanding sign. The landscaped area must be a minimum area of two (2) square feet for each square foot of sign area; and

(v) Letters and graphics on such signs must not exceed six inches (6") in height.

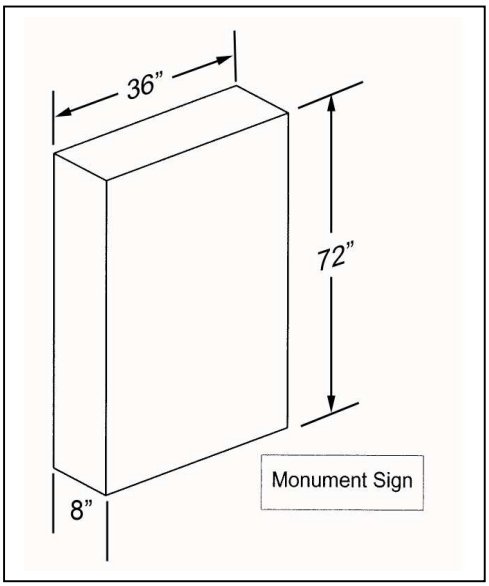

Figure 18.14 - Freestanding Signs

3. *Directional Signs* – Directional signs are permitted in accordance with the following:

(a) The sign must not exceed three (3) square feet in area; and

(b) If freestanding, the sign must not exceed six feet (6') in height.

4 *Gasoline Price Signs* – Gasoline price signs required by State law for automobile filling stations may be freestanding or erected as a building sign. Any such sign or portion thereof that exceeds the minimum requirements of State law must be counted in the number, size, and total aggregate area for the business/tenant.

5. *Changeable Copy Signs* – Changeable copy signs are permitted to announce current and future entertainment productions. Such sign may be freestanding and shall be counted in the number, size, and aggregate sign area permitted for the business/tenant.

6. *Temporary Signs* – Temporary signs are permitted in the Mixed-Use Transit District Zone (MXTD), Mixed-Use Corridor District (MXCD), Mixed-Use Business District (MXB), and Mixed-Use Employment (MXE) Zones in accordance with the following:

(a) One (1) real estate sign is permitted per lot not exceeding 48 square feet in area, and not more than 12 feet in height if freestanding, or one (1) building sign not exceeding 72 square feet in area if mounted at least 70 feet above adjacent grade, in accordance with the following:

(i) Such signs must not be illuminated;

(ii) Such signs may be maintained for a period of two (2) years or until the building or lot is rented, leased, or sold, whichever occurs first. Signs must be removed within 30 days after sale, lease, or rental. Signs installed for a two (2) year renewal period are limited to a maximum size of 24 square feet; and

(iii) Such signs must not be located within 30 feet of a residential zone.

(b) One (1) sign may be erected during the period of construction with a total maximum sign area of 72 square feet.

(c) Upon occupancy of a space by a business or tenant, banners, pennants, and displays not exceeding 32 square feet in total area may be erected for up to 60 consecutive days including days before or after actual occupancy date by the business or tenant.

(d) Temporary noncommercial signs are permitted in the MXTD, MXCD, MXB, and MXE Zones in accordance with the provisions of Section 25.18.14.a.4.(b).

25.18.15 – Election Signs

a. *Residential Zones / Residential Property in Other Zones* – In residential zones and on residential property in all zones, election signs must comply with the size, area, height, and location requirements for temporary noncommercial signs contained in Sections 25.18.11.4(d)~~d.4.~~.

1. Such signs are subject to applicable provisions of Section 25.18.04.

2. No sign permit is required.

b. *All Other Zones* – In all other zones, election signs must comply with the requirements of the zone in which it is located pertaining to the size, area, height, duration, and location requirements for temporary noncommercial signs.

1. Such signs are subject to applicable provisions of Section 25.18.04.

2. No sign permit is required.

c. *Removal* – Election signs ~~must~~no longer needed should be removed within seven (7) days after the election to which they pertain. It shall be the obligation of the candidate to cause all such signs to be removed prior to the expiration of the period.

d. *No Illumination* – Election signs must not be illuminated.

e. *Usage of Permanent Sign* – Nothing herein precludes the usage at any time of permanent signage permitted under this Article to advocate a candidate or issue to be voted on in an election.

25.18.16 – Signs on Public Property and the Public Right-of-Way

a. *Signs Prohibited* – No sign is permitted on public property or within the public right-of-way except as directed or authorized by the City Manager.

b. *Exceptions* – The City Manager may direct or authorize the erection of one (1) or more of the following signs on public property or within the public right-of-way:

1. Traffic control signs;

2. Signs that provide directional or other public service information;

3. Signs pertaining to a governmental or public purpose;

4. Signs pertaining to the use, maintenance, and/or operation of public property or right-of-way and/or pertaining to any events or activities lawfully conducted on said property or right-of-way;

5. Signs pertaining to the closure or partial closure of a road or other public right-of-way; and

6. Such other signs deemed to be in the public interest.

c. *Community Events and Noncommercial Messages* – The City Manager may designate one (1) or more areas on public property or within the public right-of-way for the erection of signs pertaining to publicly and/or privately sponsored community events and noncommercial messages. Such signs must be erected and maintained in accordance with such standards, requirements, and conditions as may be established by the City Manager.

25.18.17 – Noncommercial Signs in Lieu of Commercial Signs

Notwithstanding any provision of this Article or Chapter to the contrary, any sign permitted by this Article or Chapter to contain a commercial message may, in lieu thereof, contain a noncommercial message unrelated to the business, tenant, or entity located on the premises where the sign is erected, provided that the other criteria and regulations contained in this Article and Chapter have been satisfied, including but not limited to size, height, setback, location, duration, design, maintenance, and construction regulations and criteria.

Article 19 – Enforcement

25.19.01 – Responsible Persons

The owner, developer, tenant, and/or occupant of a property are jointly and severally responsible for ensuring compliance with all applicable provisions of this Chapter, including but not limited to the following requirements:

1. Structures must be erected, moved, altered, and enlarged in accordance with the development requirements of the zone in which the structure is located;

2. Land and structures must be used, designed, and arranged solely for uses listed in this Chapter as permitted in the zone in which such structure or land is located; and

3. All applicable zoning approvals for the erection, alteration, and use of a structure must be issued pursuant to the provisions of this Chapter, before such structure is erected or altered or the use is activated.

25.19.02 – Enforcement Authority

a. The ~~Chief of Planning or Chief of Inspection Services, as applicable~~City Manager or designee, is responsible for the enforcement of the provisions of this Chapter.

b. The ~~Chief of Planning or Chief of Inspection Services, as applicable~~City Manager or designee, is authorized to make such inspections as are reasonable and necessary to determine satisfactory compliance with this Chapter.

25.19.03 – Violations

a. *Violation Generally* – A violation of this Chapter will occur with the failure to comply with:

   1. Any provision of this~~e~~ Chapter; or

   2. The terms of any conditions of any permit or authorization granted pursuant to this Chapter.

b. *Municipal Infraction* – A violation of this Chapter constitutes a municipal infraction for which a citation may be issued.

c. *Separate Violations* – Each day a violation continues constitutes a separate and distinct violation for which separate enforcement action may be taken.

d. *Enforcement Actions* – When there is reason to believe that a violation of this Chapter has occurred the Chief of Planning or Chief of Inspection Services, as applicable, may pursue one (1) or more of the remedies set forth in this Article 19, subject to the notice provisions set forth in Section 25.19.04.

25.19.04 – Notice of Violation

a. Where deemed appropriate, the ~~Chief of Planning or Chief of Inspection Services~~City Manager or designee may issue a Notice of Violation in accordance with this Section, 25.19.04, prior to pursuing any additional remedies for violations of this Chapter.

b. If the ~~Chief of Planning or Chief of Inspection Services~~City Manager or designee has reason to believe that a violation of this Chapter has occurred, ~~the Chief of Planning or Chief of Inspection Services will notify those person(s) responsible~~ notice shall be given to the owner of, and other persons responsible for the property to which the suspected violation pertains in writing by first class mail and either ~~hand~~personal delivery or posting of the property in a manner reasonably calculated to inform the responsible person of the alleged violations.

c. The Notice of Violation must contain the following information:

1. The nature of the violation;

2. The location of the property where the zoning violation is occurring or to which the violation pertains;

3. The specific relief sought;

4. The name and telephone number of the department to contact for additional information;

5. An order that the violation be abated within a specified time frame; and

6. The manner in which the responsible person may dispute the existence of a violation.

d. Upon a showing of good cause, the ~~Chief of Planning or Chief of Inspection Services~~City Manager or designee may grant additional time in which to abate the violation~~ upon a showing of good cause~~. The ~~Chief of Planning and/or Chief of Inspection Services~~City Manager or designee must establish procedures for the requesting and granting of additional time.

e. ~~Upon the expiration of the period of time given in the notice to abate the violation, or upon receipt of a written notification that a responsible person~~

~~disputes the existence of a violation, the Chief of Planning or Chief of Inspection Services will determine whether a violation exists. If a violation is determined to exist, the Chief of Planning or Chief of Inspection Services may pursue additional remedies~~If the violation is not abated within the time provided in the notice, the City Manager or designee may pursue any of those remedies authorized by this Chapter or this Code.

25.19.05 – Municipal Infraction Citation

The ~~Chief of Planning or Chief of Inspection Services~~City Manager or designee may issue a municipal infraction citation for each violation and impose the applicable fines pursuant to Section 1-9 of the City Code, Violations and Penalty – Municipal Infractions.

25.19.06 – Stop Work Order

a. When the condition or activity on a property is believed to be in violation of this Chapter, the ~~Chief of Planning or Chief of Inspection Services~~City Manager or designee ~~may issue~~ a written order may be issued requiring some or all development activity on the property to stop until specified corrective measures are taken to bring the property into compliance with the requirements of this Chapter.

b. A stop work order must include:

   1. The nature of the violation;

   2. The actions necessary to correct or abate the violation, or the conditions under which work may be resumed;

   3. The name and telephone number of the department to contact for additional information; and

   4. The manner in which the existence of a violation may be disputed.

c. The stop work order must be served upon:

   1. The site supervisor of the property on which work is being performed by:

      (a) Personal delivery; or

      (b) Posting the property in a manner reasonably calculated to give notice to the person responsible for the property and persons working on the property; and

2. The responsible person(s) for the property in the same manner as a Notice of Violation is served pursuant to Section 25.19.04.b and c.

d. Upon service of a stop work order, the activity cited must cease immediately.

e. Any person who performs, or allows the performance of, an activity on the property in violation of a stop work order is guilty of a separate and distinct violation of this Chapter.

25.19.07 – Suspension and Revocation of Zoning Approvals

a. Upon a determination that a responsible person for the property has failed to abate a violation or has violated a stop work order, written notice may be sent~~the Chief of Planning or Chief of Inspection Services may send a notice~~ directing the responsible party to appear before the applicable Approving Authority and show cause as to why the zoning approval or approvals for the property to which the violation pertains should not be suspended or revoked.

b. The show cause order and notice of the show cause hearing must be served upon the responsible persons in the same manner as a Notice of Violation is served pursuant to Section 25.19.04.b and c. Notice of the show cause hearing must also be given in accordance with the provisions of Section 25.05.03.c.

c. A decision must be rendered by the Approving Authority in the same manner that it renders other decisions. An aggrieved party may appeal such decision in the same manner as other decisions of the Approving Authority are appealed.

d. If a zoning approval is revoked pursuant to this Section, 25.19.07, any structure, improvement, or use of the property constructed or implemented pursuant to the revoked zoning approval is not entitled to the benefit of any provision of Article 8, "Nonconformities".

25.19.08 – Withholding Other Zoning Approvals

~~When the Chief of Planning or Chief of Inspection Services has determined that a violation of this Chapter has occurred and has initiated enforcement action, any~~When a court of law has found a property to be in violation of any provision of this chapter or a fine imposed by a municipal infraction citation has been paid, the Approving Authority may defer action on any pending application for a zoning approval related to the same property or development project to which the court decision ~~enforcement action~~ pertains until the violation is abated or corrected or the enforcement action is concluded.

25.19.09 – Additional Remedies

In addition to any other enforcement actions, the City at any time has the right to seek injunctive relief or any other appropriate legal or equitable remedy to prevent, enjoin, abate, or remove a violation of this Chapter.

25.19.10 – Remedies Cumulative, Not Alternative

a. The remedies available to the City under this Article are cumulative and not alternative. The decision to pursue one (1) remedy does not preclude the pursuit of any other remedy.

b. The remedies available to the City under this Article are not exclusive. The City may pursue additional remedies as needed.

c. The imposition of any remedy pursuant to this Article does not preclude any aggrieved party from exercising any legal remedy otherwise available to such party.

Article 20 – Adequate Public Facilities

25.20.01 – Adequate Public Facilities Standards

a. The Mayor and Council has adopted Adequate Public Facilities Standards by resolution, establishing the method used by the City to ensure that the necessary public facilities will be available to serve proposed new development or redevelopment. The Mayor and Council will periodically review the Adequate Public Facilities Standards and modify them as deemed necessary.

b. Any development or redevelopment within the City must comply with all requirements of the Adequate Public Facilities Standards, unless a waiver is granted pursuant to said standards. A waiver of the requirement to comply with one (1) or more of the Adequate Public Facilities Standards may be granted only upon a super-majority vote of the Approving Authority. For purposes of this Article, a super-majority vote must be three (3) votes for the Board of Appeals, five (5) votes for the Planning Commission, and four (4) votes for the Mayor and Council. The Chief of Planning may not grant a waiver.

c. A finding that public facilities are adequate may include consideration of mitigation of impacts that are necessary to comply with the required level of service as set forth in the Adequate Public Facilities Standards.

25.20.02 – Applicability

a. Except as otherwise provided in this Chapter, no development can be approved without a determination that the public facilities are adequate, as provided herein.

b. An application for any development approval or any amendment thereto, that is subject to the provisions of this Chapter, must not be approved unless the Approving Authority determines that public facilities will be adequate to support and service the area of the proposed development. Public facilities and services to be examined for adequacy will include, but not necessarily be limited to, roads and public transportation facilities, sewerage and water service, schools, and fire and emergency services protection.

c. The applicant for any development approval, or any amendment thereto, that is subject to the provisions of this Chapter must, at the request of the Approving Authority, submit sufficient information and data on the proposed development to demonstrate the expected impact on and use of public facilities and services by possible uses of said development. Utilizing the most recent public facilities assessment, the applicant must demonstrate mitigation measures designed to alleviate any adverse impact on public facilities deemed inadequate in the public facilities assessment as set forth in the Adequate Public Facilities Standards. The resulting development must not result in any impact on public facilities that

exceed any level of service established by the Adequate Public Facilities Standards.

d. The applicant may request conditional approval of the development application, subject to future availability of the necessary public facilities. The Approving Authority may grant the conditional approval for a period of two (2) years. Extensions may be granted in accordance with the provisions of Section 25.20.03.b.4. Such conditional approval will place the application in a queue maintained by the Chief of Planning. The order of the queue will be based on the date of the letter stating the action taken by the Approving Authority. If, at the end of the conditional approval period the necessary public facilities are not deemed available, the approval becomes void.

e. Once any development approval or any amendment thereto, that is subject to the provisions of this Chapter, has a valid adequate public facilities determination, an application to implement such development approval is not subject to further adequate public facilities determination, except for water and sewer service, which is confirmed prior to the issuance of a building permit, provided that the adequate public facilities determination and any extension thereof, has not expired.

~~f.Any development application filed prior to September 20, 2005, as that application may be amended prior to approval, but no later than September 20, 2006, and any subsequent application to implement such development approval, is not subject to the Adequate Public Facilities Standards, except for water and sewer service, which is confirmed prior to the issuance of a building permit.~~

25.20.03 – Adequate Public Facilities Determination: Validity Period; Extension; Redetermination

a. *Validity Period*

1. *Approvals of Development* - Except as otherwise provided in this Section, 25.20.03,~~-~~ a determination of adequate public facilities made in connection with the approval of any development approval or any amendment thereto, that is subject to the provisions of this Chapter, is timely and remains valid so long as the underlying approval remains valid. If at any time a development approval or any amendment thereto, that is subject to the provisions of this Chapter, becomes void due to lack of implementation or otherwise, the determination of adequate public facilities also becomes void with respect to that portion of the approved project that has not been timely implemented or has otherwise become void. An extension of time granted for the implementation of any development approval or any amendment thereto, automatically extends the validity period for the determination of adequate public facilities.

2. *Approvals of Preliminary Plans* - A determination of adequate public facilities made in connection with the approval of a preliminary plan of subdivision (or final plat of subdivision where a preliminary plan is not required) is timely and remains valid for a period as determined by the Planning Commission at the time of subdivision approval. Where a subdivision plat is approved prior to the approval of a site plan or other development approval by the Approving Authority, the Approving Authority may defer the determination of adequate public facilities until consideration of such site plan or other development approval.

3. *Prior Approvals of Development Procedures and Optional Method* - A determination of adequate public facilities made prior to _____ [effective date] in connection with the approval of a development pursuant to a special development procedure (Variable Lot Size Development, Cluster Development, Residential Townhouse Development, Planned Residential Unit Development, I-3 Optional Method of Development, Preliminary Development Plan) or pursuant to an optional method of development requiring a Preliminary Development Plan, under the zoning regulations in effect at the time, is timely and remains valid for a period as determined by the Mayor and Council or the Planning Commission, as applicable, at the time of approval of the exploratory application, concept plan, or preliminary development plan, as applicable.

4. *Considerations in Setting Validity Periods* - In setting the validity period for a determination of adequate public facilities, the Approving Authority must consider the size and complexity of the development, the mix of uses and current and future market projections for the proposed uses, and the required public improvements and/or impact mitigations and the schedule for completion of such improvements and mitigations.

b. *Extension*

1. *Extension of Development Implementation Is an Extension of Validity Period* - An extension of time granted for the implementation of any development approval or any amendment thereto, other than approval of a preliminary plan of subdivision or approval of any Planned Development identified in Article 14 of this Chapter ~~a project under the special development~~ procedures prior to _____ [effective date] automatically extends the validity period for the determination of adequate public facilities.

2. *Residential Subdivision Extension* - The Planning Commission may extend the validity period for a determination of adequate public facilities for a preliminary plan of subdivision (or a final plat of subdivision where a preliminary plan is not required) for an exclusively residential subdivision where at least 50% of the entire subdivision has received building permits

prior to the date of application for extension. The Planning Commission may approve one (1) or more extensions provided that the aggregate length of all extensions for the development does not exceed 30 months for subdivisions with an original period of five (5) years or less and does not exceed six (6) years for subdivisions with an original validity period of greater than five (5) years.

3. *Nonresidential Subdivision Extension* - The Approving Authority may extend the validity period for a determination of adequate public facilities for any ~~preliminary plan of subdivision~~ approval that allows nonresidential development ~~and for any development that is subject to a special development procedure approved prior to _____ [effective date]~~ provided that:

   (a) Forty percent (40%) of the approved development is either built and/or under construction and/or has received building permits;

   (b) All of the infrastructure required by the conditions of the original preliminary plan approval have been constructed or bonded, or the payments for construction have been made or bonded;

   (c) The approved development is an "active" project as demonstrated by at least ten percent (10%) of the project having been completed (as evidenced by occupancy permits having been issued or, for developments where occupancy permits are not typically issued, final inspection has been completed and approved) within the last four (4) years before an extension request is made, or at least five percent (5%) of the project having been completed within the last four (4) years before an extension request is made, if 60% of the project has been built and/or under construction and/or has received building permits.

   (d) The aggregate length of all extensions for the development does not exceed 30 months for projects up to 150,000 square feet, or six (6) years for projects 150,000 square feet or greater.

4. *Extension Request and Review; Expiration of Adequate Public Facilities Determination*

   (a) A request for extension must be filed with the original Approving Authority before the expiration of the validity period for which the extension is requested.

   (b) A new development schedule or phasing plan for completion of the project must be submitted to the Approving Authority for approval.

(i) The extension expires if the development is not proceeding in accordance with the phasing plan, unless a revision to the schedule or phasing plan is approved by the Approving Authority.

(ii) A revision to the new development schedule or phasing plan may be approved if documentation is provided to show financing has been secured for either:

A. Completion of at least one (1) new building in the next stage of the amended development schedule; or

B. Completion of infrastructure required to serve the next stage of the amended development schedule.

(iii) No additional development beyond the amount approved in the determination of adequate public facilities may be proposed or approved.

(iv) No additional public improvements or other conditions beyond those required for the original project approval may be required.

5. *Extension Not Automatic* – Compliance with the conditions of this Section, 25.20.03, including instances where the applicant has completed all conditions imposed at the time of development approval to meet adequate public facilities requirements, does not require the Approving Authority to extend the validity period of a finding of adequate public facilities.

6. *Reevaluation and Reaffirmation* – After the expiration of a determination of adequate public facilities, reaffirmation of the adequacy of the public facilities to serve the project may be granted by the original Approving Authority based on an analysis of the impact of the net remaining development on the public facilities, consistent with the Adequate Public Facilities Standards. The analysis shall apply credits for infrastructure that has been provided in conjunction with the development. If the analysis indicates that existing and programmed public facilities will be overburdened, mitigation of said impacts shall be required as a condition of reaffirmation.

25.20.04 – Applicability to Previously Approved ~~Special~~ Planned Development ~~Projects~~

a. ~~*Special Development Procedures Prior to _____* - Development approved~~Any Planned Development identified in Section 25.14.07 of this Chapter ~~under a special development procedure prior to _____ [effective date]~~ is deemed to satisfy the Adequate Public Facilities Standards for the following validity periods:

1. The number of years specified in the original approval, if explicitly stated; or

2. If the original approval does not specify the number of years that public facilities are deemed adequate, the validity period ends 25 years from November 1, 2005.

b. *Extension* - The Mayor and Council may approve one (1) five-year (5-year) extension to implement the approved development when the applicant demonstrates that either:

1. Development of the project has proceeded with due diligence but that factors beyond the control of the developer, such as economic conditions or change in governmental regulations, have precluded development of the project within the approved time frame; or

2. The project is substantially complete, provided that all infrastructure required by the conditions of the approved exploratory application, concept plan, or preliminary development plan have been constructed, bonded, or payments for construction have been made. Internal infrastructure improvements required only to serve the unconstructed portions of the project do not need to be completed.

c. *Expiration* - If the adequate public facility determination expires, the unconstructed portion of the development must satisfy the relevant public facilities standards, with credit for provided facilities, prior to approval of subsequent detailed applications, use permits, or final record plats.

Article 21 – Plats and Subdivision Regulations

25.21.01 – Plats

There are two (2) types of plats:

~~a.~~1. Final record plats which are either:

~~1.~~(a) Subdivision plats (when there is an assemblage or division of land); or

~~2.~~(b) Recordation of an existing single unit detached residential lot; and

~~b.~~2. Ownership plats.

25.21.02 – Final Record Plats

a. *Subdivision Plats* - Subdivision is the process of assembling or dividing land. Final record plats are the illustrated system of mapping and identifying lots within densely populated areas into a single mapping system.

b. *Record Plats* - Record plats illustrate a metes and bounds description of the property into a system of lot and block numbering, the naming of the tract (subdivision name), and the assignment of a plat number when recorded among the Land Records of Montgomery County, Maryland.

c. *Legal Description* - The lot, block, subdivision name, plat number along with the notation that it is recorded among the Land Records of Montgomery County, Maryland becomes the legal description for the land included on the plat.

25.21.03 – Recordation of an Existing Single Unit Detached Dwelling Residential Lot (Property)

a. *Purpose* – To provide a process for recording an existing residential property on a Final Record Plat among the Land Records of Montgomery County, Maryland, whether or not the property meets the current standards for a developable ~~record~~ lot, so as to allow for the development or redevelopment of the property.

b. *Required Criteria* – The Planning Commission ~~may~~ must approve a plat ~~under this Section, 25.21.15~~, only when one or more of the following conditions are met:

1. The property being platted is a deeded lot that has existed in the same configuration since at least October, 1957;

2. The property being platted is a multiple-lot property that required a minimum of two (2) lots for development at the time the substandard lots were created and the plat seeks to consolidate the lots into a single record lot; or

3. The property being platted is a multiple-lot property that contains an existing house that straddles the common lot line and the plat seeks to consolidate the property into a single record lot.

c. *Other Properties* – The assemblage or division of properties that do not meet the above criteria are considered subdivision or resubdivision and must be processed under the subdivision plat process.

25.21.04 – Subdivision Approval Required

a. *General Approval Requirement* - ~~After _____ [effective date] of this Chapter, a~~A person cannot subdivide or resubdivide land within the City without the approval of the Planning Commission and the recording of a Final Record Plat among the land records of the County in accordance with the provisions of this Article.

b. *Exclusions* - The approval of the Commission is not required for the following types of subdivision:

1. Any division of land that creates a lot that has an area of at least ten (10) acres or more, so long as no new streets or roads are created as a result;

2. The division or sale of land by judicial decree; and

3. The sale or exchange of parcels of land between owners of adjoining properties, provided that additional lots are not created and that the original lots are not reduced below the minimum sizes required by this Chapter or other applicable law.

25.21.05 – Applications

Applications for approval of a preliminary subdivision plan or final record plat must be submitted in accordance with the provisions of Section 25.05.02. The application for a residential subdivision ~~that does not require site plan review~~ must contain the information required by Chapter 4 of the Code regarding the provision of publicly accessible art in private development.

25.21.06 – Adequate Public Facilities

A preliminary plan of subdivision must not be approved unless it complies with the requirements for adequate public facilities as set forth in Sec. 25.20.02.

25.21.07 – Waivers; Modification

a. *Application* - Where a subdivider desires a waiver from, or modification to, any provision of this Article, an ~~written~~ application must be submitted to the Planning Commission with a statement of reasons for such request and such information as may reasonably be required by the Planning Commission.

b. *Findings* - If the Planning Commission finds that undue hardship will result from strict compliance with any requirement of this Article, it may grant a waiver or modification from such requirement so that substantial justice may be done if the public health, safety, aesthetics, morals, or general welfare will not be impaired and the waiver will not be contrary to the intent and purpose of the Plan or this Chapter.

c. *Conditions* - In granting waivers and modifications, the Planning Commission may impose such reasonable conditions as will substantially secure the objectives of the standards or requirements so waived.

d. *Prohibition on the Creation of Pipestem Lots* - The Planning Commission cannot grant a variance or waiver from these regulations in order to create a new pipe stem lot in a Single Dwelling Unit Residential ~~Low Density~~ Zone.

25.21.08 – Submission Requirements for Preliminary Subdivision Plans

a. *Natural Resources Inventory* - Prior to submission of a preliminary subdivision plan, the applicant must have an approved valid Natural Resources Inventory (NRI) on file with the City Forester, prepared according to the adopted *Environmental Guidelines*.

~~a.~~b. *Clarity and Scale* - The preliminary plan must be clearly and legibly drawn or reproduced at a scale of not less than one (1) inch equals 100 feet, and on one (1) sheet wherever possible.

~~b.~~c. *Information to Include* - The preliminary plan must be designed in compliance with the provisions of this Article, and must give or show the following information and such other information as the Planning Commission reasonably deems necessary:

1. A key map showing the entire subdivision and its relationship to surrounding areas;

2. The tract name, liber~~,~~ and folio number, tax map sheet, subdivision name, block and lot number, and the following names and addresses:

   (a) The record owner or owners,

   (b) The subdivider;~~,~~ and

   (c) The person who prepared the plan~~;~~.

3. Acreage of tract to be subdivided to nearest tenth of an acre;

4. Contours at five (5) foot intervals for slopes averaging ten percent (10%) or greater and at two (2) foot intervals for land of lesser slope;

5. Location of existing and proposed property lines, streets, easements (including public utility easements), buildings, watercourses, railroads, bridges, culverts, drainpipes, location of existing utility systems, historic districts, identified archaeological sites, and any natural features such as forested areas and rock formations. Rights-of-way and roadway widths, grades and gradients must be indicated on the plan;

6. A preliminary storm and sanitary drainage study must be included as part of the preliminary plan application indicating the location of the proposed connections to the existing system;

7. Location of sites to be dedicated or reserved for public use, including, but not limited to, parks, playgrounds and schools;

8. One hundred year flood limit and floodplain study;

9. Certification that the subdivider is agent or owner of the land or that the owner has given consent under an option agreement;

10. A copy of the U.S.D.A. Soils Map with the boundary of the subdivision shown at the same scale as the plan submitted; and

11. A copy of the preliminary Forest Conservation Plan (FCP) as submitted to the Forestry Department of the City.

25.21.09 – Preliminary Plan Approval Procedure

a. *Filing Requirement* - The subdivider must prepare and file with the Planning Commission a preliminary plan in accordance with Sec. 25.21.08, above.

b. *Copies* - Seven (7) copies of the preliminary plan and supplementary material specified must be submitted to the Planning Commission with an application at least ten (10) days prior to the meeting at which it is to be considered.

c. *Notice* – The applicant must send notice of the application for a preliminary plan in accordance with the provisions of Sec. 25.05.03.c to all property owners and residents within 750 feet from the boundaries of the area described in the application. Notification must state that all interested parties have 30 days from the date of the letter to provide comments.

~~c.~~d. *Staff Recommendation* - Following a review by the staff of the preliminary plan and other material submitted for conformity with the provisions of this Chapter and all other applicable laws and a review with the subdivider of changes deemed advisable and the kind and extent of improvements to be made by the subdivider, a written staff recommendation will be made available to the subdivider.

~~d.~~e. *Planning Commission Action* - The Commission must, within 60 days after the preliminary plan has been deemed complete and accepted for review, act thereon as submitted or modified. The Commission may approve, approve with conditions~~,~~ or disapprove, and must state its action in the records of the Commission~~,~~ and notify the subdivider and such agencies of referral of its action. Failure to act within 60 days constitutes approval of the preliminary plan. However, the applicant may waive this requirement and consent to an extension or waiver of such period.

~~e.~~f. *Findings* - A preliminary plan will be approved if the Planning Commission finds that the proposed subdivision will not:

1. Constitute a violation of any provision of this Chapter or other applicable law;

2. Violate or adversely affect the Plan;

3. Overburden existing public services, including but not limited to water, sanitary sewer, public roads, storm drainage, and other public improvements;

4. Adversely affect the health or safety of persons residing or working in the subdivision or neighborhood;

5. Be detrimental to the public welfare or injurious to property or improvements in the neighborhood;

6. Be unsuitable for the type of development, the use contemplated, and available public utilities and services; or

7. Unreasonably disturb existing topography, in order to minimize stormwater runoff and to conserve the vegetation cover and soil.

~~f.~~*g* *Conditions* - The Planning Commission may attach such conditions to the approval of the preliminary plan as may be reasonable and necessary to assure that the proposed subdivision will be consistent with the purpose and intent of this Chapter.

~~g.~~*h.* *County and State Recommendation* - A preliminary plan must not be approved by the Commission unless there is on file with the Commission the recommendation of such County or State government departments which have jurisdiction in the area affected by the subdivision. Each agency to which a plan is referred will return one (1) copy of the plan to the Commission within 30 days of referral, with its recommendation noted thereon. If such recommendation is not made within the 30 day period by any agency to which referred, the preliminary plan is deemed to be approved by it, unless the period has been extended by the Commission.

~~h.~~*i.* *Revocation of Approval* - Approval of the preliminary plan may be revoked by resolution of the Commission at any time prior to the recordation of the final plat, upon a finding by the Commission that the preliminary plan does not comply with these regulations, any other applicable laws or regulations, or with the Plan or any portion thereof.

~~i.~~*j.* *Link between Preliminary Plan and Final Plat* - Approval of a preliminary plan does not constitute approval of the final plat, but must be a guide to the preparation of the final plat.

25.21.10 – Plats and Data for Final Approval

a. *Clarity and Scale* - The final plat must be drawn with a permanent media on tracing cloth or other stable base material 18 inches high by a minimum of 18 inches wide and must be at a scale of 100 feet to one (1) inch or larger. Where necessary, the plat may be on several sheets accompanied by an index sheet showing the entire subdivision.

b. *Information to Include* - The final plat must show the following:

1. Title of the plat, The subdivision's name, the name of the subdivision's owner, and the appropriate data, scale, and north arrow of the plat;

2. The tract boundary lines, right-of-way lines of streets, easements, and other rights-of-way and property lines of residential lots and other sites with accurate dimensions, bearings, and distances. A curve table indicating central angle, radius, tangent, arc, chord, and chord bearings for all curves; name and right-of-way width of each street or other right-of-way;

3. The location, dimensions, and purposes of any easements;

4. ~~Each block must be lettered and the lots within each block must be numbered consecutively, beginning with number one (1)~~New lots within an existing subdivision must continue the previously established lot and block numbering system.;

5. The purpose for which parcels, other than residential lots, is dedicated;

6. A statement by the owner establishing minimum building setback lines on all lots, or a showing of any building setback lines established greater than the minimum;

7. The location and description of monuments;

8. The names of record owners of adjacent unplatted land;

9. The lot, block and subdivision name of adjacent plotted land.

~~9.~~10. Certification and seal by a land surveyor registered in the State, certifying the accuracy of survey and plat;

~~10.~~11. Certification by the Planning Commission approving the plat;

~~11.~~12. A statement of dedication by the owner of dedicated streets, rights-of-way, and any sites to public use;

~~12.~~13. All bearings must be ~~referred to the meridian as established by~~generated in the Maryland Coordinate System (MCS). Where no MSC monument exists, the Department of Public Works may determine the acceptable meridian; and

~~13.~~14. A certification that the subdivider is the owner of the land.

c. *Additional Information to Include* - Other detailed plans and data that must accompany the final plat include:

1. Cross Sections and profiles of streets including storm and sanitary sewers and water mains, approved by the Department of Public Works; and

2. Such other certificates, affidavits, or endorsements as may reasonably be required by the Planning Commission or the Department of Public Works in the enforcement of the Chapter;

d. *Format for Digital Submission* - The final plat must be submitted in one (1) of the following electronic media formats, except where a substitute format is approved by the Chief of Planning based upon a finding by the Chief of Planning that it would be an unusual hardship for an applicant to comply with the provisions of this subsection.

1. AutoCAD-compatible DWG or DXF file of the record plat, in a layering format acceptable to the Planning Commission, with all property line work accessible on a separate layer.

2. Coordinate file in ASCII format containing point numbers and values for all property line work. A plat legibly showing the property line work (i.e., worksheet) and point numbers must accompany the file. If the subdivision has multiple plats, one (1) coordinate file and plat for the whole subdivision (with boundaries of each record plat designated) will be accepted.

e. *Media for Digital Submission* - The final record plat must be submitted on electronic media, such as high density 3.5 inch diskettes, CD-ROM disks, or such other electronic media as may be developed, from time to time, and commonly used.

~~f.*Maryland Coordinate System Format* - The final record plat data must be generated in the Maryland Coordinate System (MCS). Where no MCS control monuments exist, WSSC datum will be acceptable.~~

~~g.*Recordation* - When all conditions of the approval are met, the Chief of Planning will record the plat among the land records of the County.~~

25.21.11 – Final Record Plat Approval Procedures – Generally

a. *Conformation with Preliminary Subdivision Plan* ~~–~~ *Except where a Preliminary Subdivision Plan is not required, t*~~T~~he final record plat~~, with the exception of final~~

~~plats submitted as otherwise provided,~~ must substantially conform to the preliminary subdivision plan as approved.

b. *Copies* - Copies of the final plat and other exhibits required for approval must be prepared in accordance with the provisions of this Article and submitted to the Planning Commission within two (2) years after approval of the preliminary or concept plan;, otherwise, the approval of the preliminary subdivision plan is deemed to have expired. For good cause shown, not more than two (2) extensions not exceeding one (1) year each may be granted by the Planning Commission.

c. *Application for Final Plat Approval* - Application for approval of the final plat must be submitted in writing to the Planning Commission at least ten (10) days prior to the meeting at which it is to be considered. If not previously approved for the subject property, an approved Natural Resources Inventory must be on file with the City Forester prior to application submission.

d. *Notice* – The applicant most send notice of the application of a Final Record Plat in accordance with the provisions of §25.05.03.c to all property owners and residents within 750 feet from the boundaries of the area described in the application. Notification must state that all interested parties have 15 days from the date of the letter to provide comments. A second notice must be sent ten (10) days prior to Planning Commission scheduled action date.

~~d.~~e. *County and State Approval* - No final plat will be approved by the Commission without prior approval of any County or State government departments which have jurisdiction. Such agencies must approve, with or without modification, or disapprove the plat to the extent that each has jurisdiction. Such departments or agencies must be requested to submit their approval or disapproval to the Commission in writing within 15 days of the receipt of the final plat from the Commission. If they fail to act, such failure is deemed to be approval.

~~e.~~f. *Acceptance of Portion of Plan* - The final plat may represent only a portion of the preliminary subdivision plan, provided that the public improvements to be constructed in the area covered by the plat are sufficient by and of themselves to accomplish a proper development and to provide adequately for the public health, aesthetics, safety, and welfare, including adequate access to contiguous areas.

~~f.~~g. *Planning Commission Action* - The Commission must approve or disapprove a final plat within 30 days after accepting the complete application; otherwise, such plat is deemed approved, and a certificate to that effect must be issued by the Commission on demand; provided, however, that the applicant may waive this requirement and consent to an extension of such period. The grounds for

disapproval of any plat must be stated in the records of the Commission and a copy furnished to the applicant.

~~g.~~h. *Recordation* - After all conditions are satisfied, the Commission must record the plat in the land records of the County and notify the subdivider of the date of recording and the plat book and plat number.

~~h.~~i. *Revocation of Approval* - In the event that the final plat is not so recorded within two (2) years after receiving approval, due to the failure of the subdivider to comply with any conditions, the application is considered withdrawn and any previous approval is revoked. For good cause shown, not more than two (2) extensions not exceeding one (1) year each may be granted by the Planning Commission; except that the Commission may extend the time for recording the final plat to the expiration date of any existing site plan or project plan approval.

25.21.12 – Resubdivision and Minor Subdivisions

The procedure for the filing of a final plat for the resubdivision of a lot or parcel, or for a minor subdivision, is the same as indicated in this Article for an original subdivision, except that the submission of a preliminary plan is at the option of the applicant.

25.21.13 – Ownership Plats

a. *Purpose* – An ownership plat may be approved for the purpose of designating land as separate lots for purposes of ownership identification only. Lots shown on the plat must be depicted with metes and bounds descriptions and resemble a Final Record Plat but the lots shown on the ownership plat do not constitute~~are not~~ a resubdivision of the original record~~ed~~ lot or lots~~and the ownership plat does not create new record lots~~.

b. *Findings* - Where more than one (1) building or building component exists, or is to be located, on a tract of land, the Planning Commission may approve an ownership plat if the Commission finds all of the following:

1. The land is located in a zone other than the R-400, R-200, R-150, R-90, R-75, R-60, and R-40 Zones, except that an ownership plat is permitted in the previously mentioned zones if the property contains or is approved for a use other than single-unit detached residential;

2. The ownership plat is reasonably necessary to accommodate the financing or separate ownership of a building or group of buildings or building components on the tract of land;

3. The subdivision into individual record lots for each building or building component is not feasible because:

   (a) Setback, open space or lot size requirements or other development standards of the zone reasonably preclude such subdivision;

   (b) Amenity features required in the zone or pursuant to an approved use permit or site plan for the tract are designed to serve the various buildings or building components, or other design features of the project are integrated among the buildings or components;

   (c) Density calculations or bonus densities allowed in the zone and approved in a use permit or site plan are based on the area of the entire tract; or

   (d) The creation of ownership lines or financing lines is intended principally to accommodate the ~~phased development of the tract~~separate ownership or financing rather than its formal subdivision; and

4. The ownership plat will not:

   (a) Constitute a violation of any provision of this Chapter or other applicable law;

   (b) Violate or adversely affect the Plan;

   (c) Be unsuitable for the type of development, the use contemplated, and available public utilities and services; or

   (d) Affect adversely the health or safety of persons residing or working in the neighborhood.

c.~~5.~~*Conditions* - The Planning Commission may attach such conditions to the approval of the ownership plat as may be reasonable and necessary to assure that the proposed ownership plat will be consistent with the purposes and intent of this Chapter.

~~6.~~d. *Approval Required for Recordation or Sale* - No person can record an ownership plat among the land records of the County, or sell any property with reference to an ownership plat, until such ownership plat has first been approved by the Planning Commission. The Planning Commission must not consider an ownership plat for approval until a final subdivision plat and site plan or a project plan has first been approved for the entire tract of land. Any person seeking to

erect, modify, or delete any building or other structure on a tract of land included on an ownership plat must first apply for, and obtain, approval of a new or amended site plan or project plan for the entire tract.

~~7.~~e. *Application Requirements* - Each application for approval of an ownership plat must be submitted in accordance with the provisions of Section 25.05.02. The ownership plat must be prepared in compliance with the requirements of Section 25.21.10. Individual sewer and water connections for buildings are to be made in accordance with Chapter 24 of the City Code.

25.21.14 – Cluster Development

a. *Cluster Development*

1. *Generally* – Development of single-unit detached dwellings with varying individual lot areas, lot widths, and setbacks, some of which are less than required by Sec. 25.10.05, may be permitted by the Planning Commission in accordance with the provisions set forth in the following table. Lots of varying area must be distributed throughout the development, and not concentrated in any particular location.

Zone	Minimum Area of Development (Acres)[1]	Maximum Density (d.u/acre)	Smallest Lot Area (sq. ft.)
R-60	5	5	4,800
R-75	5	4.3	6,000
R-90	5	3.6	7,200
R-150	5	2.6	10,500
R-200	10	2	15,000
R-400	20	1	30,000

[1]No minimum area is required where the Master Plan recommends the site as suitable for cluster development.

2. *Limitation on Reduction in Minimum Lot Area* – The Planning Commission cannot authorize a reduction in the area of any lot in any cluster ~~option~~

~~development~~ subdivision below the areas indicated on the above chart pertaining to the zone in which such lot is located.

3. Limitation on reduction of setback and lot width requirements. The Planning Commission cannot authorize a reduction requirement for a lot in a cluster subdivision in a proportion greater than the proportion by which the area of that lot has been reduced.

4. *Calculation of Density*

(a) Density is calculated over the entire area of the tract proposed for development. Any areas devoted to common open space or dedicated for a public park are included in the density calculation and no further subdivision of the property is permitted.

(b) If the tract includes an area of 100-year flood plain or areas within stream buffers as defined in the *Environmental* ~~*Regulations*~~ *Guidelines* that exceeds ten percent (10%) of the entire tract area, the area of the 100-year flood plain must be deducted from the area over which the density is calculated.

4. *Application for Development*

(a) Applications for cluster development must be submitted to the Planning Commission in accordance with the ~~site plan review~~ provisions ~~of Article 7 together with an application~~ for preliminary plan approval under procedures set forth above.

(b) Each application must be submitted in accordance with the provisions of Section 25.05.02.

5. *Required Findings* – The application will be granted for cluster development if the Planning Commission finds that the proposed development:

(a) Will not adversely affect the health or safety of persons who will reside or work in the neighborhood of the proposed development;

(b) Will not be detrimental to the public welfare or injurious to property or improvements located or to be located in or adjacent to the development;

(c) Will not overburden existing and programmed public facilities as set forth in Article 20 of this Chapter and as provided in the adopted Adequate Public Facilities Standards; and

(d) Will not be inconsistent with the intent or purpose of this Article.

25.21.15 – Performance Guarantees

a. *Performance Bond* – In order to assure the construction and installation of roads, curbs, gutters, sidewalks, water lines, storm and sanitary sewer lines, street trees, streetlights, monuments, and other public facilities, the subdivider must, prior to recordation of a final plat, deliver to the City a performance bond issued by a surety company authorized to do business in the State and satisfactory to the City Manager and the City Attorney in such amount as is estimated by the City Manager to be the total cost of the construction and installation of the required public facilities. The bond must run to the City and be conditioned as follows:

~~1.~~1. That the subdivider and the subdivider's agents and assigns will faithfully complete the construction and installation of the required public facilities within three (3) months after substantial completion of any building or structure which the facilities are designed to serve, or within two (2) years of the date of approval of the final plat;

~~2.~~2. That the subdivider and the subdivider's agents and assigns will comply with all the applicable ordinances and requirements of the City; and

~~3.~~3. That the subdivider and the subdivider's agents and assigns will save harmless the City from any expense incurred through the failure of the subdivider, the subdivider's agents and assigns, to complete the required public facilities, or from any damages growing out of the negligence of the subdivider and the subdivider's agents or assigns.

~~b.~~*b.* *Alternative to Bond* – In lieu of the performance bond, the subdivider may deliver to the City cash, a certified check, or other security satisfactory to the City Manager and the City Attorney, in such amount as is estimated by the City Manager to be the total cost of the construction and installation of the required public facilities. The cash, certified check, or other security will be accepted at the sole discretion of the City Manager or the City Manager's designee and under the terms and conditions set forth in subsection 25.21.15.a of this Section.

~~c.~~*c.* *Acceptance by City and Release of Performance Bond* – All subdividers, their agents and assigns must comply with all applicable ordinances and regulations of the City and remain liable for all public facilities until they are accepted for maintenance by the City. After completion and final inspection of the public facilities, the City Manager must either accept the facilities upon a finding that the construction of same has complied with all applicable ordinances and regulations, and release the bond or other security, or reject

the facilities or any unsatisfactory part by written notification to the subdivider. The written notification must specify the reasons for such rejection by reference to the particular ordinance or regulation which has been violated and allow a reasonable time, to be specified therein, for the subdivider to comply. If the subdivider does not, within the time specified, complete the construction according to the provisions of the applicable ordinance or regulation then the City Manager may proceed to do whatever is necessary to cause the construction to comply with the ordinance or regulation and the subdivider is liable for any expenses incurred by the City. Any acceptance of the facilities by the City Manager must be on behalf of the City by written order, fully identifying the facilities.

~~d.~~*d.* *Effect* – No bond or other security delivered under the provisions of this Section, 25.21.15, is deemed to relieve the subdivider, the subdivider's agents or servants from full compliance with all other applicable ordinances of the City, including the security requirements of Chapter 21, *Streets and Public Improvements*, Article II. Delivery of security under the provisions of Chapter 21, Article II does, however, to the extent of the facilities guaranteed thereby, entitle a subdivider to an exemption from the requirements of this Section, 25.21.15.

25.21.16 – Streets and ~~Highways~~ Public Infrastructure

a. *Conformance with the Transportation Element of the Plan* – Whenever a tract to be subdivided includes any part of a street, road, or highway indicated on the Plan, such parts must be suitably incorporated by the subdivider in the preliminary and final plat.

b. *Compliance with Chapter 21 of the Code* - All streets and highway improvements must be constructed in accordance with the specifications and requirements of Chapter 21, Article II. In addition, the subdivider must comply with the following criteria for such improvements in connection with the subdivision:

   1. Streets must reasonably conform to the natural contours of the land. However, in order to discourage through and high-speed traffic and to improve the stability of the subdivision by avoiding monotonous development in level or nearly level areas, straight portions of primary and secondary residential streets of undue length must be avoided wherever possible by the use of slight amounts of curvature.

   2. Where the subdivision abuts or contains an existing or proposed arterial street or major highway, the Planning Commission must require a service drive or lots with reverse frontage containing screen planting in a nonaccess reservation or easement along a property line or such other treatment as may be necessary for the adequate protection of such properties and to afford the separation of through and local traffic.

3. Where a railroad right-of-way or limited access highway right-of-way abuts a subdivision, the preliminary plan and final plant must provide full use of the intervening land. Provisions must be made for future grade separations whenever the Commission finds that the same are, or will be, necessary.

4. Streets must be continuous and in alignment with existing roads as far as practicable, and compose a convenient system to ensure free circulation of vehicular and pedestrian traffic.

5. If adjoining property is not subdivided, provision must be made for the projection of proposed roads by continuing the full widths of rights-of-way laid out for the roads to the boundaries of the subdivision. This provision does not prevent the establishment of cul-de-sacs within the subdivision.

6. Where the preliminary plan and final plant submitted include only part of the tract owned by the subdivider, the Commission may require a sketch of the tentative road system for all or any part of the unsubdivided contiguous land, supported by such other data as the Commission may reasonably determine to be necessary.

7. No street names can be used which will duplicate or be confused with the names of existing streets in the County. Street names will be established by the Commission.

8. Permanent cul-de-sac streets must not be longer than 1,500 feet in length and be provided at the closed end with a circular turnaround area having a minimum 110 foot diameter right-of-way.

9. Property lines at street intersections must be rounded with a radius of 25 feet or of greater radius where the Commission may reasonably deem it necessary. The Commission may permit comparable cutoffs or chords in place of rounded corners.

10. Street junctions with centerline offsets of less than 125 feet are prohibited.

11. Reservation strips controlling access to streets are prohibited if they conflict with a needed pedestrian or vehicular thoroughfare.

12. A tangent at least 100 feet long must be introduced between reverse curves on business, arterial, and primary residential streets.

13. Streets must be laid out so as to intersect as nearly as possible at right angles and no street may intersect any other street at less than 60 degrees.

14. Street right-of-way widths must be as shown in the Transportation Element of the Plan, and Chapter 21, Article II. Where not shown therein, the right-of-way for secondary residential streets must be at least 60 feet in width, except that on permanent cul-de-sac streets a right-of-way of 50 feet may be permitted.

c. The subdivider must provide the following public utility and street improvements in connection with the subdivision, except those improvements provided by the City and paid for on an assessment basis. All such improvements must be constructed in accordance with the specifications and requirements of the applicable codes, ordinances or regulations of the City.

1. Roads, including such related improvements as are required by Chapter 21, Article II.

2. Stormwater drainage as required by Chapter 21, Article II.

3. Every portion of a subdivision must be supplied with public water and sanitary sewerage facilities in accordance with Chapter 21 of the City Code or WSSC standards as applicable.

4. Mid-block access, when required by the Commission as provided in division 3 of this Article.

5. Streetlights, in accordance with plans and specifications approved by the appropriate public utility and the Director of Public Works.

~~25.21.17 – Alleys~~

~~All alley improvements must be constructed in accordance with the specifications and requirements of Chapter 21, Article II. In addition, the developer must comply with the following criteria for such improvements in connection with a subdivision:~~

~~a.1.Intersections and sharp changes in the alignment of alleys are prohibited. In the event that a waiver from this requirements is granted, corners must be cut off sufficiently to permit safe vehicular movement.~~

~~b.Dead-end alleys are prohibited.~~

25.21.17~~8~~ – Mid-Block Access

a. Mid-block access may be required by the Commission where reasonably necessary to provide circulation or access to schools, playgrounds, shopping centers, transportation, and other community facilities. This will include, when deemed necessary by the Planning Commission, pedestrian overpasses, or underpasses in the vicinity of schools, playgrounds, local shopping areas, and other neighborhood uses which generate a substantial amount of pedestrian traffic.

b. Mid-block access must be constructed by the subdivider in accordance with the construction standards of the City.

c. Mid-block access must not be less than ten feet (10') in width, and paved not less than five feet (5') in width.

25.21.18~~9~~ – Easements and Rights-of-Way

a. Easements or rights-of-way across lots must not be less than ten feet (10') in width, or of such greater width as may reasonably be required by the Commission.

b. Where a residential subdivision includes or adjoins an easement or right-of-way for an underground high volume and pressure gas transmission main, the subdivider must provide lots of sufficient size to allow a 50 foot minimum distance between the easement or right-of-way and any proposed dwelling units on the lots.

c. The Public Utility improvements (water, sewer and storm drains) must comply with the Department of Public Works Standard Details for Construction for City Utility Easements or other applicable Washington Suburban Sanitary Commission (WSSC) and Montgomery County standards.

25.21.19~~20~~ – Public Sites and Open Spaces

a. Where a proposed park, playground, or other public use shown in the Plan is located in whole or in part within a subdivision, the subdivider must dedicate or reserve, at the option of the Commission, adequate space for such purpose in such area within the subdivision when the Commission finds the requirements to be reasonably necessary to the public health, aesthetics, safety, or welfare.

b. Where reasonably deemed necessary by the Commission, upon consideration of the particular type of development proposed in the subdivision, the Commission

may require the dedication or reservation of such other areas or sites of a character, extent, and location reasonably related to the needs generated by such development.

c. Whenever a preliminary plan or final plat proposes the dedication of land to public use and the Commission finds that such land is not required or suitable for public use, the Commission may either refuse to approve the preliminary plan or final plat or it may require rearrangement of lots to include such lands.

25.21.20~~1~~ – Floodplain Regulations

a. No lot may be platted within the limits of the 100 year floodplain of any stream or other drainageway, the limits of which are defined as set forth in Chapter 10 of the Code using generally accepted engineering methods approved by the Director of Public Works and conducted by or at the expense of the subdivider.

b. The Commission may waive this requirement where land bordering on a stream is used in conjunction with private recreation or conservation uses.

25.21.~~22~~21 – Tree Planting

a. The subdivider shall plant at least one (1) street tree per 40 feet of lot frontage within the public right-of-way or if approved by the Approving Authority, adjacent to the public right-of-way. The species, location and method of planting to be approved by the City Forester.

b. The subdivider shall plant a minimum of one (1) tree in the front yard and two (2) trees in the rear yard of every residential lot as approved by the City Forester.

c. Tree planting must be done in accordance with the provisions of Chapter 10.5 of the City Code, "Forest and Tree Preservation".

25.21.22~~3~~ – Lots

a. *Generally* – The lot size, width, depth, shape, and orientation, and minimum building setback line must be in accordance with the provisions of this Chapter and all other applicable laws.

b. *Resubdivision of Existing Lots* – In any resubdivision of developed or undeveloped lots within an existing residential area, the plat must maintain, to the extent feasible, the average area and frontage of existing lots within 500 feet of the proposed resubdivision. This requirement supersedes the minimum lot size and frontage requirements of the applicable zone, except where the average lot

size or frontage of the existing lots is smaller than the minimum requirements of the zone, in which case the minimum requirements of the zone apply.

c. *Pipe Stem Lots* – The following provisions apply only to platting of deeded pipe stem lots that were in existence prior to April 24, 2006 and are now being platted:

1. It must be noted on the final subdivision plat that for pipe stem lots municipal refuse collection, snow removal, and road maintenance are provided to the junction of the pipe stem lot driveway and public street.

2. Front setback distance must be measured from the point where the lot and pipe stem join.

3. The City may not accept for filing any application for subdivision, resubdivision, or any other application that creates a new pipe stem lot or lots for single-unit detached residential dwellings. This restriction cannot be waived under Section 25.21.07.

4. Any record lot which is a pipe stem lot is considered a buildable lot.

5. Any parcel meeting the definition of a pipe stem lot that was in existence prior to April 24, 2006 may be platted as a record lot.

25.21.23~~4~~ – Sediment Control and Stormwater Management

The approval of all preliminary and final plans and extensions of previously approved plans must include provisions for stormwater management erosion and sediment control in compliance with the provisions of Chapter 19.

25.21.24~~5~~ – Erosion Area Regulations

No lot may be platted within the limits of an erosion area of any stream or other drainageway as determined by the procedures as set forth in Chapter 19 of the Code and the adopted City of Rockville *Environmental Guidelines*. The procedures must be conducted by or at the expense of the subdivider.

25.21.26~~6~~5 – Monuments

a. Two (2) stone or concrete reference monuments of a size and type approved by the City Manager must be set within each block or portion thereof and the location of each must be established on the final plat.

b. Metal monuments of a size and type approved by the City Manager must be located in the ground at all intersections of streets and alleys with plat boundary lines where there is a change in direction or curvature.

c. All monuments must be clearly visible upon the completion of all improvements and must be flush with the ground.

~~25.21.27 – Utility and Street Improvements~~

~~The subdivider must provide the following public utility and street improvements in connection with the subdivision, except those improvements provided by the City and paid for on an assessment basis. All such improvements must be constructed in accordance with the specifications and requirements of the applicable codes, ordinances or regulations of the City.~~

~~a.Roads, including such related improvements as are required by Chapter 21, Article II.~~

~~b.Stormwater drainage as required by Chapter 21, Article II.~~

~~c.Every portion of a subdivision must be supplied with public water and sanitary sewerage facilities.~~

~~d.Mid-block access, when required by the Commission as provided in division 3 of this Article.~~

~~e.Streetlights, in accordance with plans and specifications approved by the appropriate public utility and the Director of Public Works.~~

Landscaping, Screening, and Lighting Manual

Section 1 – Purpose

a. The purpose and intent of this Manual is to:

   1. Preserve and promote the health, safety, and general welfare of the public;

   2. Facilitate the creation of a convenient, attractive, and harmonious community;

   3. Conserve natural resources including adequate air and water;

   4. Conserve properties and their values;

   5. Preserve the character of an area by preventing harmful effects of potentially dissimilar uses; and

   6. Encourage the appropriate use of land.

b. More specifically this manual is intended to minimize the impact of dissimilar uses on adjoining or nearby uses by requiring a screen or buffer between the uses in order to lessen the impact of noise, dust, and other debris, motor vehicle headlight glare, or other artificial light intrusion, and other objectionable activities or impacts conducted on or created by an adjoining or nearby use.

c. Additionally, this manual is intended to require the landscaping of certain parking lots in order to:

   1. Reduce the harmful effects of wind and air turbulence, heat, and noise, and the glare of motor vehicle lights;

   2. Preserve underground water resources and to permit the return of precipitation to the ground water strata;

   3. Act as a natural drainage system and ameliorate storm water drainage problems;

   4. Reduce the level of carbon dioxide and return pure oxygen to the atmosphere;

   5. Prevent soil erosion;

   6. Provide shade; and

7. Enhance the appearance of parking lots.

d. In addition, any applicable provisions of the Forest and Tree Preservation Ordinance, being Chapter 10.5 of the City Code, apply to this manual.

Section 2 – Applicability

The provisions of this manual apply to any development subject to the site plan review or project plan review provisions of Article 7 of the City's Zoning Ordinance.

Section 3 – Administration

The Chief of Planning is responsible for the administration of this manual.

Section 4 – Landscaping and Screening Standards

a. *Application of Standards* - The following standards apply to the preservation, installation, and maintenance of all landscaping, tree cover, screening, and barriers required by the provisions of this manual.

1. The planting and maintenance of all trees must be in accordance with the provisions of the Forest and Tree Preservation Ordinance.

2. Existing native vegetation which is suitable for use in compliance with the requirements of this manual, when supplemented so as to provide planting and screening in accordance with the purpose and intent of this manual, may and should be used as required planting.

b. *Landscaping Plan and Planting Requirements*

1. A landscape plan must be submitted as required by the provisions of Article ~~15~~ 7 of the City's Zoning Ordinance and may be required for a level one (1) site plan as determined by the Chief of Planning.

2. The landscaping measures and tree cover required by this Section must be shown on such plan, and must be completed according to specifications prior to approval of any occupancy permit. The landscaping plan may incorporate the requirements of the Forest and Tree Preservation Ordinance, being Chapter 10.5 of the City Code.

3. The landscape plan must comply with the following:

(a) The plan must be drawn to the same scale as the related site plan, including dimensions and distances, but at least a minimum scale of one inch (1") equal 30 feet.

(b) The plan must include a north arrow and a location map.

(c) The plan must show:

(i) All trees to remain on the site, including type and size in DBH measurement;

(ii) All landscaping materials and tree covering and the plant material must be indicated in table form with their common and botanical names;

(iii) Existing and proposed contours of the site at a minimum 5' contour interval;

(iv) Existing and proposed parking spaces or other vehicle areas, access aisles, driveways;

(v) Existing and proposed utilities with all associated easement locations including fire hydrants.

(vi) All existing and proposed lighting;

(vii) All amenities such as benches, trash cans, picnic tables, etc;

(viii) Existing and proposed sidewalks;

(ix) The location and height of any fences or hedges; and

(x) All buildings, including any overhangs or awnings,.

(d) The Plan must also include other information as requested by the Chief of Planning.

(e) The plan must integrate stormwater controls and treatment.

c. *Maintenance*

1. The owner, or owner's agent, is responsible for the maintenance, repair, and replacement of all landscaping materials and barriers as may be required by the provisions of this manual.

2. All plant material must be tended and maintained in a healthy growing condition, replaced when necessary and kept free of refuse, debris, and exotic and invasive plants.

3. Fences and walls must be maintained in good repair. Openings within the barriers may be required by the Chief of Planning for accessibility to an area for necessary maintenance.

d. *Parking Lot Landscaping*

1. *Purpose of Internal Landscaping of Surface Parking Areas* – The minimum landscape requirements of this section are intended to alleviate adverse visual and environmental effects associated with parking facilities. The application of these standards will serve to improve compatibility and the attractiveness of such facilities, provide relief from unshaded paved areas, and minimize noise, glare, and lights associated with parking areas. In addition, these requirements will improve pedestrian safety, optimize traffic circulation patterns with better defined space, and will provide better definition of entrances and exits through the use of interior islands.

2. *Minimum Acceptable Standards* - The following requirements establish minimum acceptable standards for alleviating the visual and environmental problems associated with off-street parking facilities. Under the site plan review procedures of Article 7 of the City's Zoning Ordinance, the Planning Commission may require additional landscaping in order to ensure compatibility with adjacent properties.

   (a) *Landscape Strip Area Adjoining a Street Right-Of-Way* - Parking facilities adjoining a street right-of-way must provide a landscaping strip at least 10 feet in width.

      (i) This area must be planted with either shade or ornamental trees, depending on the site conditions and the Street Tree Master Plan except this area may be used for LID / bioretention measures (with underdrain) if that is more applicable, and planted with appropriate wetland species.

(ii) A minimum of one (1) tree for every 40 feet of lot frontage must be provided as well as an evergreen hedge planted with a minimum of 15 shrubs per 40 feet of lot frontage (no more than 30 inches in height above the street grade), a wall or fence, or other methods such as a change in grade or berm may reduce the shrub requirement by 50% to further reduce the visual impact of the parking facility.

(iii) For properties located in the MXTD or MXCD Zones, the minimum width requirement for a landscaping strip adjoining a street right-of-way may be reduced by 25% by the Planning Commission in order to achieve a better design solution through the provision of walls or fences in conjunction with landscaping.

(b) *Perimeter Landscape Area Adjoining Property Other Than a Street Right-of-Way* – Landscaped areas must be provided along the perimeter of a parking facility.

(i) The perimeter landscape strip must be at least seven feet (7') wide to allow for the planting of trees, but not less than the setback required in an adjoining ~~Single-Unit Detached~~Single Dwelling Unit Residential Zone.

(ii) Such area must contain a minimum of one (1) shade tree and 15 shrubs for every 40 feet of lot perimeter and, if space permits, must incorporate landscaped berms.

(iii) Where appropriate, two (2) ornamental trees may be substituted for one (1) shade tree and one (1) evergreen tree may be substituted for five (5) shrubs.

(iv) For properties located in the MXT~~H~~D or MXCD~~RP~~ Zones, the width ~~for~~ of a perimeter landscaping strip may be reduced by the Planning Commission in order to achieve a better design solution through the provision of walls or fences in conjunction with landscaping.

(c) *Internal Landscaping of Surface Parking Facility* - A minimum of five percent (5%) of the internal area of a surface parking facility must be landscaped with shade trees.

(i) The internal area of a parking facility is defined by the perimeter of the curbs or edge of paving and does not include drive aisles without parking on either side, sidewalks, through islands, areas within islands that contain utilities below, signs, or other landscaping.

(ii) The internal area includes all planting islands and corner areas within the facility.

(iii) The shade trees should be distributed in order to increase shade. Where possible, existing trees should be saved for this purpose.

(iv) For properties located in MXTD or MXCD Zones, the minimum internal landscaping requirements may be reduced by the Planning Commission.

(v) Where one (1) off-street parking area adjoins or abuts another parking area under different ownership or use, a landscaped planting strip not less than seven feet (7') wide must be provided.

(d) *Minimum Size of Planting Islands within Internal Landscape Area* – Within the interior of a surface parking facility, planting areas must be provided with shade trees and must be wide enough to protect the trees from a vehicle's swinging doors and bumper overhang.

(i) Planting islands which are parallel to the sides of parking spaces must be a minimum of nine feet (9') wide and ten feet (10') in length.

(ii) Planting islands at the heads of parking spaces must be a minimum of ten feet (10') wide curb face to curb face.

(e) *Type of Plant Material* – Deciduous shade trees with ground cover or low shrubs must be used as the primary landscape material for parking areas. Use of tall shrubs or low branching trees which will restrict visibility should be avoided.

3. *Perimeter Landscaping in Residential Zones*- Parking in connection with any institutional or other nonresidential use must comply with the following:

(a) *Residential Zone Standards* - In the R-400, R-200, R-150, R-90, R-75, R-60, and R-40 Zones, the following standards apply to new, enlarged, or expanded parking facilities for all institutional uses or other nonresidential uses (see Land Use Table in Article 10) except Child Care Home:

(i) No off street parking space or off-street loading area or driveway can be located within ten feet (10') of a side or rear lot line where a lot abuts a lot or land that is zoned residential or is proposed in the ~~Master~~ Plan for residential use.

(ii) No off-street parking space or off-street loading area or driveway can be located within ten feet (10') of a side or rear lot line where a lot abuts a lot or land that is zoned residential or is proposed in the ~~Master~~ Plan for residential use.

(iii) The ten foot (10') setback area from the side or rear lot line shall be used as a buffer area, and appropriate landscaping or screening must be provided. The screening area must be improved with a variety of landscape plants to include at least one (1) shade tree and 15 shrubs per 35 feet of property line. Where appropriate, two (2) ornamental trees may be substituted for one (1) shade tree and one (1) evergreen tree may be substituted for five (5) shrubs. Walls or berms, at least three (3) feet high, or fencing of at least 75% of continuous opacity may reduce the amount of landscape plants by 50%. The screening area should include the planting of canopy trees at regular intervals.

(iv) In lieu of a buffer area, a substantial setback in excess of 20 feet from any adjoining residential use may be provided, but trees must still be planted every 35 feet along the property line.

(b) *Parking Facilities in Existence as of December 2003* - Parking facilities in existence as of December 15, 2003, are nonconforming. However, they may be maintained and repaired so long as the nonconformity is not increased.

(i) Modifications to the parking facility that decrease the nonconformity may be allowed, even though such modifications do not bring the entire facility into full compliance with the provisions of this section.

(ii) If any portion of a nonconforming parking facility is brought into compliance with the provisions of this section, the nonconformity for that portion cannot be re-established.

(c) *Waivers* - A waiver of the buffering and/or screening requirements of this section may be granted by the Board of Appeals or the Planning Commission, subject to such conditions as may be deemed appropriate to effectuate the purpose of this section, if:

(i) The Board of Appeals or the Planning Commission finds:

A. That alternative means of achieving the objectives of the buffering and screening requirements meet the objectives of this section, or

B. That compliance with the buffering and screening requirements cannot reasonably be met due to unique site conditions, or

C. That there exist unique safety or security concerns that would be unreasonably compromised by compliance with the buffering and/or screening requirements; or

D. The lot occupied by the requesting use is less than 7,500 square feet in size; or

E. The owners of 70% of the residential property immediately contiguous to the area of the requested waiver affirm, in writing, their support for a waiver of the buffering and/or screening requirements of this section. The residential property referenced in this subsection shall not include property in which the institutional use seeking the waiver has any ownership or other financial interest.

(ii) This waiver does not exempt the site from requirements of the Forest and Tree Preservation Ordinance of the City Code.

4. *Parking in Connection with a Major Home-Based Business Enterprise*

~~2.~~1. For any major home-based business enterprise, screening of any parking facility is required. Such screening must provide 100% opacity to any adjoining lot or parcel in a Single-Unit Detached Dwelling Zone. Such screening may consist of vegetation, fencing, or a combination of the two (2), as determined by the Board of Appeals in considering the special exception for the home-based business enterprise. For purposes of this subsection, a parking facility consists of any off-street parking area containing six (6) or more parking spaces.

e. *References* – In addition to the regulations cited here, reference must also be made to the approved Forest and Tree Preservation Manual for the following: Approved Planting Details for Trees; City Tree Protection and Planting Notes; Species Restriction List.

Section 5 – Lighting Standards

a. *Purpose* – The purpose of this section is to establish outdoor lighting standards that protect the public from inefficient lighting, poorly shielded outdoor light sources, excessive glare, and excessive intensity of light in all areas of the City. The goal is to promote materials and installation techniques that will improve the nighttime visual environment and encourage energy conservation.

b. *Definitions* – Within this manual, the following terms have the definitions shown:

1. *Candela*: A standard unit of light intensity in a specific direction, equal to one (1) lumen per steridian.

2. *Color Rendering Index*: A method for describing the effect of a light source on the color appearance of objects compared to a reference light of the same color temperature.

3. *Efficacy*: The amount of lumens produced by a lamp or light source per unit of power, expressed as lumens per watt.

4. *Footcandle*: A unit of illuminance equal to one (1) lumen per square foot. This is the illuminance provided by a light source of one (1) candela at a distance of one (1) foot.

5. *Full-Cutoff* or *Full-Cutoff Light Fixture*: A light fixture that is designed to block the amount of light emitted from the fixture at certain angles in compliance with the IESNA "full-cutoff" or "full-cutoff light fixture" standard or another equivalent standard identified in regulations.

6. *Illuminance*: The amount of light falling on a unit area of surface (luminous flux per unit area), measured in footcandles.

7. *Initial Light Output*: The amount of light emitted by an outdoor light fixture when it is new, as identified in the manufacturer's specifications.

8. *Luminance*: The amount of light emitted by an outdoor light fixture or reflected by a surface, measured in candelas per square foot.

9. *Lumen*: One (1) unit of luminous flux. This is used to measure the amount of light emitted from a light source. One (1) lumen is equal to the amount of light emitted by a light source of one (1) spherical candela that falls on a one (1) square-foot surface located one (1) foot away.

10. *Off-Site Spill*: Light that falls beyond the boundary of the property on which a light fixture is located.

11. *Power Density*: The amount of electricity used to generate light per unit of area, expressed in watts per square foot.

12. *Steridian*: A three-dimensional analogue of an angle. For example, if one takes a sphere of unit radius, then a segment of one (1) steridian covers one quarter (1/4) of the surface area of the sphere.

c. *Glare Measurement Standards* – Illumination levels must be measured with a photoelectric photometer having a spectral response to that of the human eye, following the standard spectral luminous efficiency curve adopted by the International Commission on Illumination.

d. *Standards* – The following standards apply to all exterior lighting fixtures permitted after (date of adoption) regardless of zone or location within the City. All existing light fixtures that do not comply with these standards are nonconforming and subject to the provisions for development nonconformities set forth in Article 8 of the City's Zoning Ordinance.

1. All lights must be shielded in such a way as to direct all light towards the Earth's surface and away from reflective surfaces. Incidental decorative lighting may be directed towards the sky if approved by the Chief of Planning or the Planning Commission during the site plan review process.

2. Light fixtures of lamps must be shielded / shaded in such a manner as to direct the incident rays away from all adjacent property.

3. Lights on poles must not be taller than the building whose area they illuminate nor taller than fifteen feet, whichever is shorter.

4. All fixtures must meet the building code requirements.

5. Any facilities that require floodlighting may not arrange the light in such a way that it will shine towards a roadway, onto an adjacent residential property or a residential use property, or into the night sky.

6. All outdoor lighting fixtures must be aimed, located, and maintained so as not to produce disability glare.

7. High intensity light beams in the form of outdoor searchlights, lasers, or strobe lights are not permitted except as required by Federal, State, or local public safety regulations.

e. *Alternative Materials and Methods of Installation* – The provisions of this manual are not intended to prevent the use of any equipment, material, or method of installation not specifically prescribed by this manual provided the alternative has been approved by the Chief of Planning. The Chief of Planning may approve any such alternative provided that the proposed design provides the approximate equivalence to the specific requirements of this manual.

f. *Shielding and/or Aiming*

1 *Full Cut-Off Light Fixtures* - An outdoor light fixture with a total light output greater than 2,000 Lumens must:

(a) Be a full cut-off light fixture and installed and maintained level, without any upward or sideward tilt unless necessary to prevent off-site spill; and

(b) Comply with any other shielding or aiming requirement specified in regulations.

2. *Non Full Cut-Off Fixtures* - An outdoor light fixture with a total light output of 2,000 lumens or less that is not a full cut-off fixture must:

(a) Have a downward aim that does not exceed 45 degrees from vertical; and

(b) Comply with any other shielding or aiming requirement specified in regulations.

~~3.~~2. *Efficacy* – An outdoor fixture must have an efficacy equal to the greater of :

(a) Sixty (60) lumens per watt;

(b) The efficacy required by the IECC if applicable; or

(c) The efficacy established in regulations based on nationally recognized standards of best practices.

~~4.~~3. *Color Renditions* – An outdoor light fixture must have a color rendering of at least 20.

~~5.~~4. *Power Density* – An outdoor lighting system must have a power density equal to the lesser of the power density:

(a) Required by the IECC, if applicable; or

(b) Established in regulations based on nationally recognized standards or best practices.

~~6.~~5. *Controls* – An outdoor light fixture must be turned off during daylight hours.

~~7.~~6. *Object Lighting* – Lighting used to illuminate flags, statues, signs, or any other objects mounted on a pole, pedestal, or platform, and spotlighting or floodlighting used for architectural or landscape purposes must consist of full cut-off or directionally shielded lighting fixtures that are aimed and controlled so that the directed lights are substantially confined to the object intended to be illuminated. Directional control shields must be used where necessary to limit stray light. In addition, such lighting must be shielded to protect motorists and pedestrians from glare.

~~8.~~7. *Construction Site*

(a) All construction site lighting, with the exception of lighting that is used to illuminate the interiors of buildings under construction (provided for in the following paragraph) must use full cut-off or directionally shielded fixtures that are aimed and controlled so the directed light is substantially confined to the object intended to be illuminated. Directional control shields must be used where necessary to limit stray light.

(b) Frosted light bulbs must be used to light the ten foot (10') outermost perimeter area of the interiors of the buildings under construction which contain five (5) or more stories.

(c) For the purposes of this provision, a building is no longer considered under construction once exterior walls and windows are installed and permanent lighting replaces temporary lighting as the primary source of light.

~~9.~~8. *Commercial/Mixed-Use Areas*

(a) For all non residentially developed lots which contain a minimum of four (4) parking lot light poles, parking lot lighting levels for ground surface parking lots and the top levels of parking decks or parking structures must

be reduced by at least 50% of full operational levels within 30 minutes after the close of business. The reduced lighting level can be achieved by extinguishing at least 50% of the total number of pole mounted lamps, by dimming lighting levels to no more than 50% of the levels used during business or activity hours, or by some combination thereof; provided, however, that this provision does not require parking lot lighting levels to be reduced to less than 0.2 footcandles as measured horizontally at the surface on which the light pole is mounted.

(b) Outdoor lighting fixtures associated with service stations, service station/mini-marts and vehicle sale and ancillary service establishments are subject to the following:

(i) Service station and service station/mini-mart canopy lighting must not exceed a maintained lighting level of 30 footcandles under the canopy as measured horizontally at grade. However, a higher or lower maintained lighting level, not to exceed 50 footcandles may be specified by the Planning Commission in conjunction with the approval of a special exception and site plan. All underside canopy lighting must consist of full cut-off lighting fixtures.

(ii) Outdoor display area lighting used in conjunction with a vehicle sale, rental, and ancillary service establishment must not exceed a maintained lighting level of 30 footcandles as measured at grade. However a higher or lower maintained lighting level, not to exceed 50 footcandles, may be specially approved by the Board in conjunction with the approval of a site plan or special exception. For the purpose of this section, outdoor display areas include all display storage areas for vehicles offered for sale or rent and the associated travel lanes.

~~10.~~9. *Residential* - On lots which abut property that is residentially zoned and developed, vacant or homeowner's association open space, all outdoor lighting, to include light poles located on top of any parking deck or structures must be:

(a) Mounted at a height which is measured from grade to the bottom of the lighting fixture, including the height of the parking deck or structure when located on top of a parking deck or parking structure and is equal to or less than the value 3 + (D/3) where D is equal to the horizontal distance in feet from the light source to the nearest residential lot line extended vertically; or

(b) Equipped with supplemental opaque shielding on the residential property side of the lighting fixture to reduce glare caused by direct light source exposure.

11. *Recreational/Outdoor Facilities in All Zones*

(a) When an outdoor recreation/sports facility has illuminated playing fields/courts that, individually or cumulatively, exceed 10,000 square feet in area, and/or associated light poles that exceed 20 feet in height, the playing fields/courts are subject to the provisions of this section. Other components such as facilities to include, but not limited to, parking lots, administrative offices, restrooms, ticket sales, concession stands, and bleachers or other spectator viewing areas, are not be subject to this section, but are subject to Section 5, f, Shielding or Aiming provisions above, as applicable.

(b) A sports illumination plan must be prepared by a lighting professional that is certified by the National Council on Qualifications for the Lighting Professions (NCQLP) or a State licensed professional engineer, architect, or land surveyor and must contain the following information:

(i) The boundaries, dimensions, and total land area of the outdoor recreation/sports facility property at a designated scale of not less than one inch equals fifty feet (1” = 50’). For the proposed uses on large tracts of land where the lighted playing field/court occupies a small portion of the site, boundaries, dimensions, and total land area of just the lighted playing field/court with perimeter areas, as required below must be provided, at a designated scale of not less than one inch equals fifty feet (1” = 50’), with a graphic that depicts the location of the fields/courts in relation to the perimeter lot lines of the entire property.

(ii) The location and limits of the playing fields/courts, must include a perimeter area. For baseball or softball fields, the perimeter area extends 30 feet in a direction perpendicular to the foul lines and away from the field. The perimeter area for rectangular playing fields, such as soccer, football, lacrosse, and field hockey, extends 20 feet from the side lines and 30 feet from the ends lines.

(iii) The location, height, and illustration of each style of all pole, building, and ground mounted lighting fixtures for the playing field/court.

(iv) A photometric diagram showing predicted lighting levels for the proposed playing field/court and associated perimeter area lighting.

(v) The lighting for playing field/courts and associated perimeter areas must comply with the maximum footcandle levels indicated for the specific uses listed in the table below, unless a lesser limit is specifically approved during site plan review in conjunction with the approval of a special exception or development plan. Footcandle measurements must be measured horizontally three (3) feet above grade level and must represent maintained lighting levels. The Chief of Planning will determine maximum permitted lighting levels for outdoor recreation/sports facilities which are not listed in the table below.

(v) ~~(vi)~~ All playing field/court lighting fixtures must use full cut-off or directionally shielded lighting fixtures aimed toward the playing field/court and shielded in directions away from the playing field/court so as to minimize glare and light trespass onto adjacent properties.

(vii) The use of outdoor playing field/court lighting shall not be permitted between the hours of 11:00 pm and 7:00am, unless other hours are specifically approved by the Planning Commission during site plan review, or by the Board of Appeals in the case of a special exception.

(viii) When a site plan approval is not required and the plan is submitted as a separate submission, five (5) copies of the plan must be submitted to the Chief of Planning for review and approval and shall be subject to a fee ~~as provided in Chapter __ of the Code~~adopted by the Mayor and Council.

Recreation/Sport Facility Use	**Specific Lighted Area**	**Footcandles (max.)**
Archery Ranges	N/A	10
Baseball/Softball	Infield	60
	Outfield	40
Baseball/Professional	Infield	150
	Outfield	100
Baseball Hitting Ranges	N/A	50
Basketball, Volleyball	N/A	30
Field Hockey, Football, Soccer, Lacrosse, Track & Field	N/A	50
Go-cart Tracks	N/A	30

Recreation/Sport Facility Use	Specific Lighted Area	Footcandles (max.)
Golf-Courses	Tee Boxes, Greens	5
Fairways		3
Golf-Driving Ranges	Tree Boxes	20
	Fairways	3
	Greens	5
Golf-Miniature	N/A	20
Horse Riding Ridings/Show Areas	N/A	30
Ice Skating, Ice Hockey, Roller Skating Rinks	N/A	50
Swimming Pools	Pool Surface	10
	Pool Deck	30
Tennis Courts (College/High School)	N/A	60
Tennis Courts (Recreational)		40

12. *Exemptions* - The following are exempt from the provisions of this manual, provided that such fixtures, except for those set forth in Paragraphs 1 and 2 below, do not cause disability and glare:

(a) Lighting fixtures and standards required by the Federal Communications Commission, Federal Aviation Administration, Federal and State Occupational Safety and Health Administrations, or other federal, state, or county agencies to include street lights within public right-of-way;

(b) Outdoor lighting fixtures required by law enforcement, fire, and rescue, the Maryland Department of Transportation or other emergency response agencies to perform emergency or construction repair work, or to perform nighttime road construction on major thoroughfares;

(c) Holiday lighting fixtures;

(d) Motion activated light fixtures located as follows:

(i) On lots developed with single-unit detached dwellings when such lighting fixtures emit initial lighting levels of 6,000 lumens or less, are extinguished within five (5) minutes upon cessation of motion and are aimed such that the lamp or light bulb portion of the lighting fixture is not visible at five feet (5’) above the property boundary; or

(ii) On all other lots when such lighting fixtures are aimed such that the lamp or light bulb portion of the lighting fixture is not directly visible at five feet (5') above the property boundary; or

(iii) On lots developed with single-unit detached dwellings, outdoor lighting fixtures with initial light outputs of 2,000 lumens or less are not subject to the provisions of subsections i and ii above; and

(e) Fixtures owned and/or maintained by the City. Such fixtures should, to the extent possible, comply with the standards set forth herein, but are not considered nonconforming.

13. *Application Procedures*

(a) *Application to Include* - For any project where outdoor lighting is to be provided, the following must be provided at the time of application for special exception, site plan, or building permit, as the case may be.

(i) A photometric plan prepared by a lighting professional that is certified by the National Council on Qualifications for the Lighting Professions (NCQLP), or a State licensed professional engineer, architect, landscape architect or land surveyor and containing the following information:

A. The location and limits of the canopy for outdoor display area at a scale of not less than 1 inch equals fifty feet (1" = 50'); and

B. The location and height of all canopy lighting for service stations and service station/mini-marts and all pole, building, or ground mounted lighting fixtures for an outdoor display area at a vehicle sale, rental, and ancillary service stations; and

(ii) A photometric diagram showing predicted maintained lighting levels produced by the proposed lighting fixture facilities.

(b) *Modifications/Amendment to Permit* - Should the applicant desire to substitute outdoor lighting fixtures or lamps to be installed on private property after a permit has been issued, the applicant must submit all changes to the Chief of Planning for approval, with adequate information to assure compliance with this manual.

13. *Complaint* - Any person may file a written complaint with the Chief of Planning alleging that an outdoor lighting system does not comply with this manual.

    (a) *Contents* - A complaint must be in writing and contain:

        (i) The name and address of the complainant;

        (ii) The address and, if known, the name of the owner of the building, structure, or area that allegedly does not comply with this manual; and

        (iii)A description of the alleged violation.

    (b) *Inspection* - Within 30 days after receiving a complaint, the Chief of Planning must inspect the building, structure, or area to determine the validity of the complaint.

    (c) *Notice of Violation and Corrective Order* -If the Department finds that a building, structure, or area does not comply with this manual, the Chief of Planning must issue a notice of violation and corrective order.

        (i) The notice of violation must identify the Section of this manual that has been violated and a date, the nature, and the extent of the violation.

        (ii) The corrective order must describe the action required to correct the violation and direct the owner to correct the violation within a specified period.

    (d) *Notice to Complainant* - Within 14 days after inspection, the Chief of Planning must mail the results of the inspection to the complainant, including a copy of any notice of violation and corrective order.

    (e) *Re-inspection* - When the time to correct a violation ends, the Chief of Planning must re-inspect the building, structure, or area to determine whether the violation has been corrected.

    (f) *Municipal Infraction Citation* - If the Chief of Planning finds that the violation has not been corrected, the Chief of Planning will issue a Municipal Infraction Citation, which will be processed in accordance with the provisions of Article ~~18~~ 19 of the City's Zoning Ordinance.